Pilot's Operating Handbook

PS-28 Cruiser

equipped with analogue instrument package



Airplane Registration Number: **YR-CRU**

Airplane Serial Number: **C0605**

This Pilot's Operating Handbook is
EASA approved under

Restricted Type Certificate No.: EASA.A.546

This document is prepared in accordance with the AP DOA Approval No. AP332.

Intentionally left blank

PS-28 Cruiser aircraft

is designed and manufactured by:



CZECH SPORT AIRCRAFT

Czech Sport Aircraft a.s.
Na Záhonech 212, 686 04 Kunovice
Czech Republic

Website: www.czechsportaircraft.com
E-mail: office@czechsportaircraft.com
Phone: +420 576 514 034 (Sales Dept.)
Fax: +420 576 519 394

Intentionally left blank

RECORD OF REVISIONS

Rev. No.	Affected pages	Revision name	Approved	Date
1	i, v, vii, 4-6, 4-11	Specification of engine speed at airplane waiting	EASA AFM Approval 10041100	21.08.2012
2	i, v, vii, viii, 1-5, 2-4, 2-6, 6-3	Supplementation of maximum empty weight value, correction of max. fuel pressure limit value	EASA AFM Approval 10049423	05 June 2014
3	i, v, vii, viii, ix, 1-4, 2-6, 2-7, 2-8, 4-6, 4-9, 4-11, 5-2, 7-3, 7-4, 8-5	Substitution pages for aircraft with CT measurement acc. to Rotax service bulletin SB-912-066UL and SB-912-066.	EASA Major Change Approval 10055978	2015-12-11
4	i, iii, v, vii, viii, xiii, 8-5	Change of coolant liquid volume.	EASA Major Change Approval 10060546	2016-12-21

Intentionally left blank

LIST OF EFFECTIVE PAGES

Section	Page	Date	Section	Page	Date
	i	2016-10-25	**2**		
	ii	2011-10-24	EASA approved	2-10	2011-10-24
	iii	2016-10-25	EASA approved	2-11	2011-10-24
	iv	2011-10-24	EASA approved	2-12	2011-10-24
	v	2016-10-25			
	vi	2011-10-24	**3**		
	vii	2016-10-25	EASA approved	3-1	2011-10-24
	viii	2016-10-25	EASA approved	3-2	2011-10-24
	ix	2015-11-11	EASA approved	3-3	2011-10-24
	x	2011-10-24	EASA approved	3-4	2011-10-24
	xi	2011-10-24	EASA approved	3-5	2011-10-24
	xii	2011-10-24	EASA approved	3-6	2011-10-24
	xiii	2016-10-25	EASA approved	3-7	2011-10-24
	xiv	2011-10-24	EASA approved	3-8	2011-10-24
	xv	2011-10-24	EASA approved	3-9	2011-10-24
	xvi	2011-10-24	EASA approved	3-10	2011-10-24
			EASA approved	3-11	2011-10-24
1			EASA approved	3-12	2011-10-24
	1-1	2011-10-24	EASA approved	3-13	2011-10-24
	1-2	2011-10-24	EASA approved	3-14	2011-10-24
	1-3	2011-10-24			
	1-4	2015-11-11	**4**		
	1-5	2014-05-29		4-1	2011-10-24
	1-6	2011-10-24		4-2	2011-10-24
				4-3	2011-10-24
2				4-4	2011-10-24
EASA approved	2-1	2011-10-24		4-5	2011-10-24
EASA approved	2-2	2011-10-24		4-6	2015-11-11
EASA approved	2-3	2011-10-24		4-7	2011-10-24
EASA approved	2-4	2014-05-29		4-8	2011-10-24
EASA approved	2-5	2011-10-24		4-9	2015-11-11
EASA approved	2-6	2015-11-11		4-10	2011-10-24
EASA approved	2-7	2015-11-11		4-11	2015-11-11
EASA approved	2-8	2015-11-11		4-12	2011-10-24
EASA approved	2-9	2011-10-24			

LIST OF EFFECTIVE PAGES (Cont'd)

Section	Page	Date	Section	Page	Date
5			**7**		
EASA approved	5-1	2011-10-24		7-1	2011-10-24
EASA approved	5-2	2015-11-11		7-2	2011-10-24
EASA approved	5-3	2011-10-24		7-3	2015-11-11
EASA approved	5-4	2011-10-24		7-4	2015-11-11
EASA approved	5-5	2011-10-24		7-5	2011-10-24
EASA approved	5-6	2011-10-24		7-6	2011-10-24
EASA approved	5-7	2011-10-24		7-7	2011-10-24
EASA approved	5-8	2011-10-24		7-8	2011-10-24
EASA approved	5-9	2011-10-24			
EASA approved	5-10	2011-10-24	**8**		
EASA approved	5-11	2011-10-24		8-1	2011-10-24
EASA approved	5-12	2011-10-24		8-2	2011-10-24
				8-3	2011-10-24
6			EASA approved	8-4	2011-10-24
EASA approved	6-1	2011-10-24	EASA approved	8-5	2016-10-25
EASA approved	6-2	2011-10-24		8-6	2011-10-24
EASA approved	6-3	2014-05-29		8-7	2011-10-24
EASA approved	6-4	2011-10-24		8-8	2011-10-24
EASA approved	6-5	2011-10-24			
EASA approved	6-6	2011-10-24	**9**		
EASA approved	6-7	2011-10-24		9-1	2011-10-24
EASA approved	6-8	2011-10-24		9-2	2011-10-24
EASA approved	6-9	2011-10-24			
EASA approved	6-10	2011-10-24			
EASA approved	6-11	2011-10-24			
EASA approved	6-12	2011-10-24			
EASA approved	6-13	2011-10-24			
EASA approved	6-14	2011-10-24			
EASA approved	6-15	2011-10-24			
EASA approved	6-16	2011-10-24			

LIST OF ABBREVIATIONS

ADI	Attitude direction indicator	
AGL	Above Ground Level	
ALT	Altitude or Altimeter	
ATC	Air Traffic Control	
ASI	Airspeed Indicator	
bar	Pressure unit	*(1 bar = 14.5037 psi)*
BEACON	Anti-collision beacon	
°C	Temperature in degree of Celsius	*(°C = (°F - 32) / 1.8)*
CAS	Calibrated Airspeed	
CDI	Course deviation indicator	
C.G.	Center of Gravity	
CHT	Cylinder head temperature	
COMM	Communication transceiver	
CT	Coolant temperature	
EFIS	Electronic Flight Information System	
ELT	Emergency Locator Transmitter	
EMS	Engine Monitoring System	
°F	Temperature in degree of Fahrenheit	*(°F = (°C x 1.8) + 32)*
ft	Foot or feet	*(1 ft = 12 in = 0.305 m = 305 mm)*
fpm	Vertical speed in feet per minute	*(1 fpm = 0.0051 m/s)*
GPS	Global Positioning System	
hp	Power unit	*(1 hp = 0.7457 kW)*
IAS	Indicated Airspeed	
IC	Intercom	
IFR	Instrument Flight Rules	
in	Inch	*(1 in = 25.4 mm)*
ISA	International Standard Atmosphere	
KCAS	Calibrated Airspeed in Knots	
kg	Kilogram	*(1 kg = 2.205 lb)*
KIAS	Indicated Airspeed in Knots	
km	Kilometer	*(1 km = 1000 m = 0.54 NM = 0.621 SM)*
km/h	Speed in kilometers per hour	*(1 km/h = 0.54 knots = 0.621 mph = 0.278 m/s)*
knot	Speed in NM per hour	*(1 knot = 1.151 mph = 1.852 km/h = 0.514 m/s)*
KTAS	True Airspeed in Knots	
kW	Power unit	*(1 kW = 1.341 hp)*
L	Liter	*(1L = 0.22 UK gal = 0.264 US gal)*
lb	Pound	*(1 lb = 0.454 kg)*
lbf	Force unit	*(1 lbf = 4.448 N)*
m	Meter	*(1 m = 1000 mm = 3.28 ft = 39.37 in)*
mm	Millimeter	*(1 mm = 0.03937 in)*
MAC	Mean Aerodynamic Chord	
max.	Maximum	
min.	Minimum or minute	
mph	Speed in statute miles per hour	*(1 mph = 0.87 knots = 1.61 km/h)*

MTOW	Maximum TakeOff Weight	
m/s	Speed in meters per second	*(1 m/s = 196.8 fpm = 1.944 knots = 3.6 km/h)*
N	Newton - force unit	*(1 N = 0.225 lbf)*
NM	Nautical mile	*(1 NM = 1,852 m)*
OFF	System is switched off or control element is in off-position	
ON	System is switched on or control element is in on-position	
OAT	Outside Air Temperature	
POH	Pilot's Operating Handbook	
psi	Pressure unit - pound per square inch	*(1psi = 0.0689 bar)*
rpm	Revolutions per minute	
s or sec	Second	
SM	Statute Mile	*(1SM = 1,609 m)*
TAS	True Airspeed	
US gal	US gallon	*(1 US gal = 0.83 UK gal = 3.785 L)*
V	Volt	
VFR	Visual Flight Rules	
VMC	Visual Meteorological Conditions	
VSI	Vertical Speed Indicator	
VTU	Vertical tail unit	
V_A	Manoeuvring airspeed	
V_{FE}	Maximum flaps extended speed	
V_{NE}	Never exceed speed	
V_{NO}	Maximum structural cruising speed	
V_S	Stall speed with wing flaps in retracted position	
V_{S1}	Stall speed with wing flaps in takeoff position	
V_{SO}	Stall speed with wing flaps in extended position	
V_X	Best angle of climb speed	
V_Y	Best rate of climb speed	

CS-LSA STANDARD

The *PS-28 Cruiser* aircraft is designed and built according to CS-LSA standard.

CS-LSA, Initial Issue 27 June 2011
Certification Specification for Light Sport Aeroplanes

Intentionally left blank

CONTACT INFORMATION

Czech Sport Aircraft a.s.
Na Záhonech 212, 686 04 Kunovice
Czech Republic

Website: www.czechsportaircraft.com
E-mail: office@czechsportaircraft.com
Phone: +420 576 514 034 (Sales Dept.)
Fax: +420 576 519 394

Intentionally left blank

TABLE OF CONTENTS

1. General Information
2. Limitations
3. Emergency Procedures
4. Normal Procedures
5. Performance
6. Weight and Balance
7. Description of Airplane and Systems
8. Handling and Servicing
9. Supplements

Intentionally left blank

SECTION 1

TABLE OF CONTENTS

1. GENERAL INFORMATION

1.1 Airplane specification **1-2**
1.2 Summary of performances **1-5**

1. GENERAL INFORMATION

This Pilot's Operating Handbook (POH) has been prepared to provide pilots with information for the safe and efficient operation of the *PS-28 Cruiser* aircraft and contains 9 sections. It also contains supplementary information considered to be important by the aircraft manufacturer.

Date of issue is written in the yy-mm-dd format.

NOTE

All airspeeds shown in the POH are IAS, except of shown otherwise.

Warnings, Cautions and Notes

The following definitions apply to warnings, cautions and notes in the POH.

WARNING

Means that the non-observation of the corresponding procedure leads to an immediate or important degradation of the flight safety i.e. to injury or death of persons.

CAUTION

Means that the non-observation of the corresponding procedure leads to a minor or possible long term degradation of the flight safety.

NOTE

Draws attention to any special item not directly related to safety but which is important or unusual.

1.1 Airplane specification

PS-28 Cruiser is the airplane intended especially for recreational and cross-country flying, and non-aerobatics operation.

PS-28 Cruiser is a single-engine, all metal, low-wing monoplane of semi-monocoque structure with two side-by-side seats. The airplane is equipped with a fixed tricycle undercarriage with castering nose wheel.

***PS-28 Cruiser* aircraft layout:**

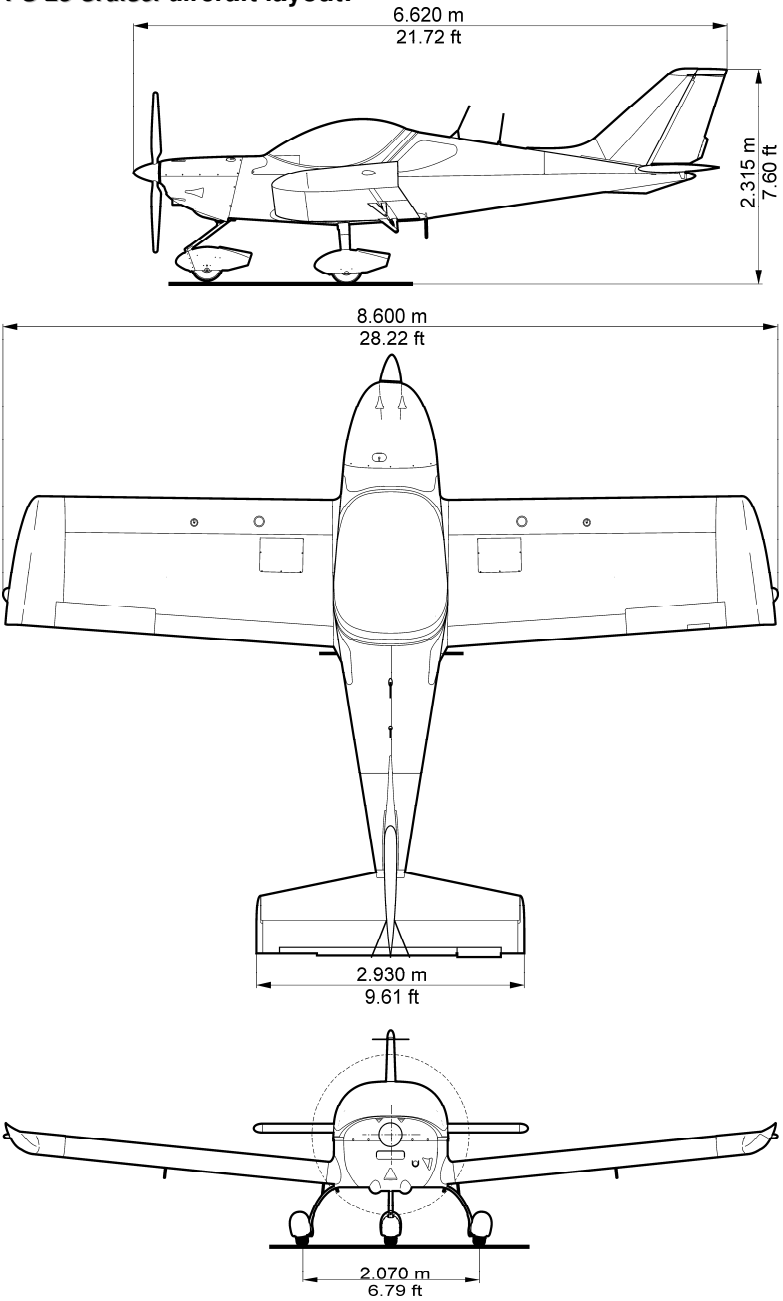

Main airplane dimensions:

Wing span ..... *8.600 m*
Length ..... *6.620 m*
Height ..... *2.315 m*
Wing area ..... *12.30 m^2*
Wing loading ..... *49 kg/m^2*
Cockpit width ..... *1.170 m*

Flight control surfaces travel:

Rudder	*30°*	*±2°*	to each side
Elevator	*+24° / -24°*	*±2°*	
Aileron	*+15° / -15°*	*±1°*	
Flaps	*0° to 30°*	*±1°*	
Aileron trim	*+20° / -20°*	*±2°*	
Elevator trim	*+22° / -28°*	*±2°*	
Anti-balance tab	*+25° / -19°*	*±2°*	

Engine:

Manufacturer ..... BRP-Powertrain GmbH&Co.KG
Model number ..... 912 S2 / ULS2
Maximum power rating ..... *73.5 kW at 5,800 RPM*
Cooling ..... liquid and air
Type ..... 4-stroke, 4 cylinder, horizontally opposed, spark ignition engine with one central camshaft-push-rod-OHV

Propeller:

Manufacturer ..... WOODCOMP s.r.o.
Model number ..... KLASSIC 170/3/R
Number of blades *3*
Diameter ..... *1,712 mm*
Pitch setting ..... *17.5 ±0.5°*
Type ..... three composite blades, ground adjustable

1.2 Summary of performances

Weights:

Max. takeoff and landing weight ..... *600 kg*

Max. weight of fuel ..... *82 kg*

Max. baggage weight in rear fuselage ..... *18 kg*

Max. baggage weight in each wing locker ..... *10 kg*

Maximum empty weight ..... *405 kg*

NOTE

Actual empty weight is shown in Section 9, Supplement No. 02

Wing loading ..... *49 kg/m^2*

Power loading ..... *8.15 kg/kW*

Speeds:

Maximum at sea level ..... *119 KIAS*

Cruise, 75% power at 3,000 ft ..... *93 KIAS*

Range and endurance:

Range ..... *512 NM* *(948 km)*

Endurance ..... *5:26 h:mm*

Conditions:

Usable fuel ..... 113 L

75% power of engine ..... 5,000 RPM

Altitude ..... 3,000 ft

Reserve ..... 30 minutes

Rate of climb:

At sea level.....*825 fpm*

Best angle of climb speed (v_x).....*55 KIAS*

Best rate of climb speed (v_y) .....*62 KIAS*

Stall speeds:

V_{S0} – flaps down, power - idle.....*31 KIAS*

V_S – flaps up, power - idle.....*37 KIAS*

Fuel:

Total fuel capacity .....*114 L*

Total usable fuel.....*113 L*

Approved types of fuel.....see chapter 2.11

Engine power:

Maximum power at *5,800 RPM* .....*73.5 kW*

Max. continuous power at *5,500 RPM*.....*69 kW*

SECTION 2

TABLE OF CONTENTS

2. LIMITATIONS

2.1	**Airspeed indicator range markings**	**2-2**
2.2	**Stalling speeds at maximum takeoff weight**	**2-2**
2.3	**Flap extended speed range**	**2-3**
2.4	**Manoeuvring speed**	**2-3**
2.5	**Maximum structural cruising speed**	**2-3**
2.6	**Never exceed speed**	**2-3**
2.7	**Service ceiling**	**2-3**
2.8	**Load factors**	**2-3**
2.9	**Approved manoeuvres**	**2-3**
2.10	**Operating weights and loading**	**2-4**
2.11	**Fuel**	**2-5**
2.12	**Engine operating speeds and limits**	**2-6**
2.13	**Engine instruments markings**	**2-7**
2.14	**Other limitations**	**2-7**
2.15	**Limitation placards and markings**	**2-9**
2.16	**Miscellaneous placards and markings**	**2-10**

2. LIMITATIONS

CAUTION

*Airspeeds values are valid for standard **AVIATIK WA037383 pitot-static probe**.*

2.1 Airspeed indicator range markings

NOTE

The stated stall speeds are valid for all flight altitudes.

Marking	Speeds value or range	Significance
	KIAS	
White arc	***31-75***	Flap Operating Range.
Green arc	***37-108***	Normal Operating Range.
Yellow arc	***108-138***	Maneuvers must be conducted with caution and only in smooth air.
Red line	***138***	Maximum speed for all operations.

2.2 Stalling speeds at maximum takeoff weight

Wing flaps position: - retract *(0°)*
- takeoff *(12°)*
- landing *(30°)*

Conditions: Weight: MTOW Engine: idle	**Wing flaps pos.**	**Stall speeds**		**Altitude loss at recovery**
		KIAS	*KCAS*	*ft*
Wing level stall	**0°**	*37*	*42*	*290*
	12°	*35*	*40*	
	30°	*31*	*37*	
Coordinated turn 30° bank	**0°**	*38*	*43*	*270*
	12°	*37*	*42*	
	30°	*30*	*36*	

NOTE

Altitude losses shown in the table present max. values determined on the basis of flight tests using average piloting skill.

2.3 Flap extended speed range - V_{S0} to V_{FE}

Flaps operating range ..... *31 - 75 KIAS*

2.4 Manoeuvring speed - V_A

Manoeuvring speed *at 600 kg* ..... *88 KIAS*

2.5 Maximum structural cruising speed – V_{NO}

Maximum structural cruising speed ..... *108 KIAS*

2.6 Never exceed speed - V_{NE}

Never exceed speed..... *138 KIAS*

2.7 Service ceiling

Service ceiling ..... *15,090 ft*

2.8 Load factors

Maximum positive limit load factor..... *+ 4 g*
Maximum negative limit load factor ..... *- 2 g*

Maximum positive limit load factor with flaps extended..... *+ 2 g*
Maximum negative limit load factor with flaps extended..... *..0 g*

2.9 Approved manoeuvres

The *PS-28 Cruiser* is approved for normal and below listed manoeuvres:

- Steep turns not exceeding *60°* bank
- Lazy eights
- Chandelles
- Stalls (except whip stalls)

2.10 Operating weights and loading

Max. takeoff weight ..... *600 kg*

Max landing weight ..... *600 kg*

Max. weight of fuel ..... *82 kg*

Max. baggage weight in rear fuselage ..... *18 kg*

Max. baggage weight in each wing locker ..... *10 kg*

Maximum empty weight ..... *405 kg*

NOTE

Actual empty weight is shown in Section 9, Supplement No. 02

WARNING

Do not exceed maximum takeoff weight 600 kg.

Number of seats *2*

Minimum crew *(only on the left seat)* ..... *1* pilot

Minimum crew weight ..... *55 kg*

Maximum crew weight on each seat ..... *115 kg*

2.11 Fuel

Fuel volume:

Wing fuel tanks capacity ..... *2x 57 L*

Total fuel capacity ..... *114 L*

Unusable fuel ..... *2x 0.5 L*

Total usable fuel ..... *113 L*

Maximum allowable difference in fuel tanks ..... *30 L*

Recommended fuel type:

NOTE

Refer to the ROTAX Operator's Manual, section 2.4 Fuel, and Rotax Service Instruction SI-912-016

MOGAS

European standards	- min. RON 95, EN 228 Super, EN 228 Super plus
US standard	- ASTM D4814
Canadian standards	- min. AKI 91, CAN/CGSB-3.5 Quality 3

CAUTION

Fuels that contain more than 5 % ethanol blend have not been tested and are not permitted for use.

AVGAS

US standard- AVGAS 100 LL (ASTM D910)

AVGAS 100 LL places greater stress on the valve seats due to its high lead content and forms increased deposits in the combustion chamber and lead sediments in the oil system. Thus it should only be used in case of problems with vapor lock or when other types of gasoline are unavailable.

2.12 Engine operating speeds and limits

Engine Model:		**ROTAX 912 S2 / ULS2**
Engine Manufacturer:		**BRP-Powertrain GmbH**
Power	***Max. takeoff:***	**73.5 kW *at 5,800 rpm (max. 5 min.)***
	Max. continuous:	**69 kW *at 5,500 rpm***
	Cruising (75%):	**51 kW *at 5,000 rpm***
Engine speed	***Max. takeoff:***	**5,800 rpm *(max. 5 min.)***
	Max. continuous:	**5,500 rpm**
	Cruising (75%):	**5,000 rpm**
	Idling:	**1,400 rpm *(minimum)***
Oil pressure	***Minimum:***	**0.8 bar *below 3,500 rpm***
	Maximum:	**7 bar *cold engine starting***
	Normal:	**2 - 5 bar *above 3,500 rpm***
Oil temperature	***Minimum:***	**50 °C**
	Maximum:	**130 °C**
	Normal:	**90 - 110 °C**
Coolant temperature (CT)	***Maximum:***	**120 °C**
Exhaust gas temperature (EGT)	***Nominal:***	**800 °C**
	Maximum:	**850 °C**
	Max. takeoff:	**880 °C**
Fuel pressure	***Minimum:***	**0.15 bar**
	Maximum:	**0.4 bar** **0.5 bar***
Engine start, operating temperature	***Minimum:***	**-25°C**
	Maximum:	**50 °C**
Limit of engine operation at zero gravity and in negative "g" condition		
	Maximum:	**5 seconds at max. -0.5 g**

* Applicable only for fuel pump from S/N 11.0036.

2.13 Engine instruments markings

Rotax 912 S2 / ULS2 73.5 kW *(98.6 hp)*	Minimum Limit (red line)	Caution Range (yellow arc)	Normal Operating Range (green arc)	Caution Range (yellow arc)	Maximum Range (red line)
Engine speed RPM	-	0-1,400	1,400-5,500	5,500-5,800	5,800
Oil Pressure	0.8 bar	0.8-2 bar	2-5 bar	5-7 bar	7 bar
Oil Temperature	50 °C	50-90 °C	90-110 °C	110-130 °C	130 °C
Coolant Temperature (CT)	-	-	50-120 °C	-	120 °C
Fuel Pressure	0.15 bar	-	0.15-0.4 bar	-	0.4 bar

2.14 Other limitations

- ***No smoking on board of the aircraft!***
- ***Approved for Day VFR flights only.***
- ***Flight in rain***

  When flying in the rain, no additional steps are required.
  Aircraft qualities and performance are not substantially changed.
  However **VMC must be maintained!**

- ***Minimum instruments and equipment list for Day VFR flights:***
  - Airspeed indicator
  - Altimeter
  - Compass (is not required by CS-LSA)
  - Fuel quantity indicator
  - Tachometer (RPM)
  - Engine instruments as required by the engine manufacturer :
    - *Oil temperature indicator*
    - *Oil pressure indicator*
    - *Coolant temperature indicator*
  - Safety harness for every used seat

WARNING

IFR flights and intentional flights under icing conditions are PROHIBITED!

WARNING

Minimum 6 L of fuel quantity allows approximately 15 minutes of safe operation!

2.15 Limitation placards and markings

Operating limitation on instrument panel

AIRSPEEDS:	
V_{NE}	138 kts
V_A	88 kts
V_{FE}	75 kts
V_{SO}	31 kts

WARNING!
DO NOT EXCEED MAXIMUM TAKEOFF WEIGHT: *600kg/1320lbs*

WARNING!
IFR FLIGHTS AND INTENTIONAL FLIGHTS UNDER ICING CONDITIONS ARE PROHIBITED

APPROVED FOR: DAY - VFR

FOR AVIATION EMERGENCY USE ONLY. UNAUTHORIZED OPERATION PROHIBITED.

Operating limitation in baggage space

BAGGAGE COMPARTMENT
MAX. BAGGAGE WEIGHT: *18kg/40lbs*

MAX. WEIGHT IN WING LOCKER: *10kg / 22lbs*

Prohibited manoeuvres

NO INTENTIONAL SPINS!
AEROBATICS PROHIBITED!

2.16 Miscellaneous placards and markings

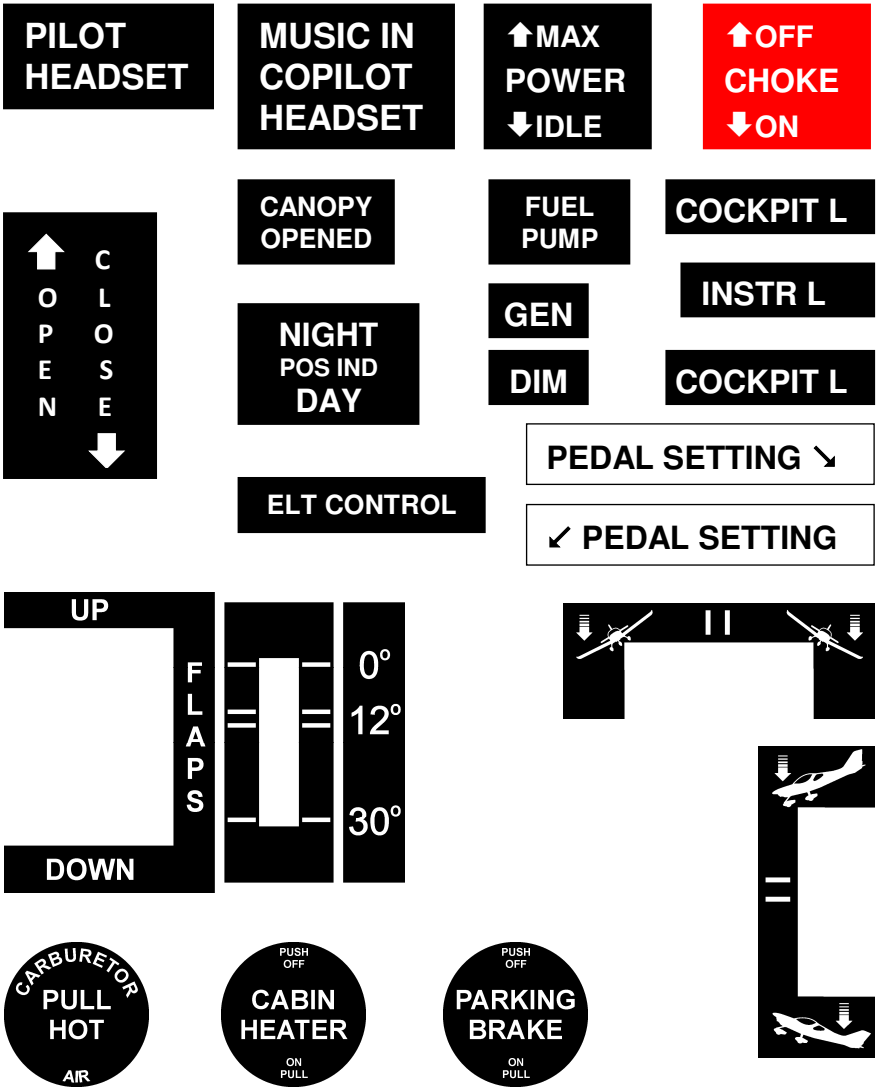

FUEL CAPACITY:
57 Litres / 15 US Gal.
MOGAS RON 95/AKI 91
AVGAS 100 LL

CANOPY OPENED

CANOPY CLOSED

FUEL DRAIN ↘

1.8 $^{+0.2}$ bar

AEROSHELL OIL
SPORT PLUS 4

1.2 $^{+0.1}$ bar

NO PUSH

NO STEP

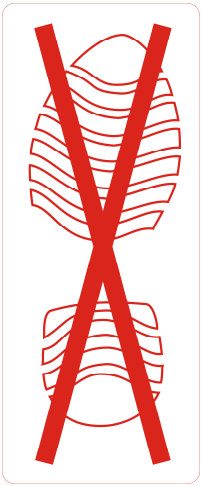

CAUTION

The owner (operator) of this airplane is responsible for the readability of placards during the aircraft service life.

Intentionally left blank

SECTION 3

TABLE OF CONTENTS

3. EMERGENCY PROCEDURES

3.1	General information	3-3
3.2	Airspeeds for Emergency procedures	3-3
3.3	Engine failure during takeoff run	3-4
3.4	Engine failure after takeoff	3-4
3.5	Loss of engine power in flight	3-4
3.6	In-flight engine starting	3-4
3.7	Loss of oil pressure	3-5
3.8	High oil pressure	3-5
3.9	Emergency landing without engine power	3-6
3.10	Precautionary landing with engine power	3-6
3.11	Engine fire during start	3-7
3.12	Engine fire in flight	3-7
3.13	Electrical fire in flight	3-8
3.14	Emergency descent	3-8
3.15	Generator failure	3-8
3.16	Overvoltage	3-9
3.17	Inadvertent spin recovery	3-9
3.18	Inadvertent icing encounter	3-10
3.19	Obstruction of air into engine filter	3-10
3.20	Engine vibration	3-11
3.21	Landing with a flat tire	3-11
3.22	Landing with a defective landing gear	3-11

3.23 Loss of primary instruments 3-11
3.24 Loss of flight controls 3-12
3.25 Power lever linkage failure 3-12
3.26 Inadvertent canopy opening during takeoff 3-13

3. EMERGENCY PROCEDURES

3.1 General information

This section provides checklists and amplified procedures for coping with various emergencies that may occur. Emergencies caused by aircraft or engine malfunction are extremely rare if proper pre-flight inspections and maintenance are practiced.
However, should an emergency arise, the basic guidelines described in this section should be considered and applied as necessary to correct the problem.

CAUTION
Airspeeds values are valid for standard ***AVIATIK WA037383 pitot-static probe****.*
These emergency procedures are valid for ***WOODCOMP KLASSIC 170/3/R*** *three composite blades ground adjustable propeller.*

3.2 Airspeeds for Emergency procedures

Engine failure after takeoff ..... *60 KIAS*
(flaps as necessary)

Maneuvering speed at *600 kg* ..... *88 KIAS*
(flaps retracted (0°))

Gliding speed ..... *60 KIAS*
(flaps retracted (0°))

Precautionary landing with engine power..... *60 KIAS*
(flaps in landing position (30°))

Emergency landing without engine power..... *60 KIAS*
(flaps as necessary)

Emergency descent..... *138 KIAS*
(flaps retracted (0°))

3.3 Engine failure during takeoff run

1. THROTTLE - **IDLE**
2. Brakes - apply
3. Ignition Switch - **OFF**

3.4 Engine failure after takeoff

1. Airspeed - maintain *60 KIAS*
2. Flaps - as necessary
3. **FUEL** selector - **OFF**
4. Ignition Switch - **OFF**
5. **MASTER GEN** - OFF
6. **MASTER BAT** - OFF *- before landing*
7. Land straight ahead, turning only to avoid obstacles

NOTE

Altitude loss during 180° turn is approximately 400 ft.

3.5 Loss of engine power in flight

1. Airspeed - maintain *60 KIAS*
2. Altitude - in accordance with actual altitude:
   - restart engine according to *3.6* or
   - search for a suitable place and perform emergency landing according to *3.9*

3.6 In-flight engine starting

1. All unnecessary electrical equipment switch - OFF
2. **MASTER BAT** - ON
3. **ENG INSTR** - ON
4. **FUEL P** - ON
5. **FUEL** selector - **LEFT** or **RIGHT** *(to tank with more quantity of fuel);* check correct position - green mark (see Chapter 7.11)

6. THROTTLE - **IDLE**
7. Ignition Switch - hold **START**
   after engine is starting - **BOTH**

After engine is running:

8. **MASTER GEN** - ON
9. **FLT INSTR** - ON
10. **AVIONICS** - ON
11. **FUEL P** - OFF
12. Other switches - ON as necessary

3.7 Loss of oil pressure

1. Oil temperature - check

If oil temperature is rising:

2. THROTTLE - reduce power to minimum for flight
3. Land - as soon as possible

CAUTION

Be prepared for engine failure and emergency landing.

If oil temperature is normal:

2. Oil temperature - monitor
3. Oil pressure - monitor
4. Land - at nearest airfield

3.8 High oil pressure

1. THROTTLE - reduce power to minimum for flight
2. Oil pressure - monitor
3. Land - as soon as possible

3.9 Emergency landing without engine power

Emergency landings are generally carried out in the case of engine failure and the engine cannot be re-started.

1. Airspeed - maintain *60 KIAS*
2. Emergency landing area - chose suitable area without obstacles
3. COMM - giving location and intentions - if possible
4. Ignition Switch - **OFF**
5. **FUEL** selector - **OFF**
6. **MASTER GEN** - OFF
7. Approach - without steep turns
8. Safety harness - fasten
9. Flaps - as necessary
10. **MASTER BAT** - OFF - *before landing*

3.10 Precautionary landing with engine power

A precautionary landing is generally carried out in the cases where the pilot may be disorientated, the aircraft has no fuel reserve or possibly in bad weather conditions.

1. Choose landing area, determine wind direction.
2. Report your intention to land and landing area location.
3. Perform low-altitude passage into wind over the right-hand side of the chosen area with flaps extended as needed and thoroughly inspect the landing area.
4. Perform circle pattern.
5. Safety harness - fasten
6. Perform approach at increased idling with flaps in landing position *(30°)* at *60 KIAS.*
7. Reduce power to idle when flying over the runway threshold and touch-down at the very beginning of the chosen area.
8. After stopping the airplane:
   Ignition Switch - **OFF**
   All switches - OFF
   FUEL selector - **OFF**
   Airplane - lock and seek assistance

NOTE

Watch the chosen area steadily during precautionary landing.

3.11 Engine fire during start

1. **FUEL** selector - **OFF**
2. THROTTLE - **MAX**
3. Ignition Switch - **OFF**
4. **MASTER BAT** & **GEN** - OFF
5. Airplane - leave
6. Extinguish fire by yourself or call for a fire-brigade if you cannot do it.

3.12 Engine fire in flight

1. **FUEL** selector - **OFF**
2. THROTTLE - **MAX**
3. **CABIN HEATER** - **PUSH OFF**
4. Ignition Switch - **OFF** - after the fuel in carburetors is consumed and engine shut down
5. Airspeed - maintain *60 KIAS*
6. Emergency landing - perform according to *3.9* as soon as possible
7. Airplane - leave
8. Extinguish fire by yourself or call for a fire-brigade if you cannot do it.

NOTE

Estimated time to pump fuel out of carburetors is about 30 sec.

WARNING

Do not attempt to re-start the engine!

3.13 Electrical fire in flight

1. **MASTER BAT** & **GEN** - OFF
2. Other switches - OFF
3. **CABIN HEATER** - **PUSH OFF**
4. Ventilation - open
5. Emergency landing - perform according to *3.9* as soon as possible

3.14 Emergency descent

1. Airspeed - max. permitted - V_{NE} = *138 KIAS*
   - V_{NO} = *108 KIAS*
   - V_A = *88 KIAS*
2. Engine RPM - do not overrun max. *5,800 rpm*

3.15 Generator failure

- **GEN** red LED annunciator illuminates and
- Voltmeter indicates voltage under *12.5 V*.

1. **MASTER BAT** & **GEN** - ON
2. Engine RPM - increase above *3,000 rpm*

If the generator failure indication persists:

3. **MASTER GEN** - OFF – ON

If the above generator failure indication persists:

4. **MASTER GEN** - OFF
5. All unnecessary electrical equipment - OFF
6. Voltmeter - monitor voltage of battery
7. Land as soon as possible at nearest suitable airport.

3.16 Overvoltage

- Voltmeter permanently indicates voltage over *14.6 V*.

1. Engine RPM - decrease to minimum usable for flight

If the overvoltage indication persists:

2. **MASTER GEN** - OFF
3. All unnecessary electrical equipment - OFF
4. Voltmeter - monitor voltage of battery
5. Land as soon as possible at nearest suitable airport.

CAUTION

Use transceiver, transponder and GPS as necessary, short time only.
Operating time of battery in good condition is up to 30 minutes.
The engine runs independently on generator functioning.

3.17 Inadvertent spin recovery

There is no uncontrollable tendency of the airplane to enter into a spin provided the normal piloting techniques are used.

Inadvertent spin recovery technique:

1. THROTTLE - **IDLE**
2. Flaps (if extended) - retract *(0°)*
3. Ailerons control - neutral
4. Rudder control - full deflect opposite to the sense of rotation
5. Elevator control - push forward

After rotation stops:

6. Rudder control - neutral
7. Elevator control - pull gently to recover diving

WARNING

Intentional spins are prohibited!

3.18 Inadvertent icing encounter

CAUTION

Aircraft is approved to operate in VMC condition only!

1. Leave icing area - turn back or change altitude to reach area with higher outside air temperature.
2. **CARBURETOR AIR** - **PULL HOT**
3. **CABIN HEATER** - **PULL ON**
4. Increase RPM to minimize ice build-up on propeller blades.
5. Continue to move control surfaces to maintain their moveability.
6. In case of icing on the leading edge of wing, the stall speed will increase.
7. In case of icing on the pitot probe, erroneous indicating of the airspeed and altimeter.
8. If you fail to recover the engine power or normal flight conditions, land on the nearest airfield *(if possible)* or depending on the circumstances, perform a precautionary landing according to *3.10* or emergency landing according to *3.9.*

NOTE

The carburetor icing and air filter icing shows itself through a decrease engine power and an increase of engine temperatures.

NOTE

Use carburetor heating during lengthy descents and in areas of possible carburetor icing.

3.19 Obstruction of air into engine filter

If the engine runs rough and power decrease, air filter can be clogged with some impurities e.g. dust or ice.

1. **CARBURETOR AIR** - **PULL HOT**
2. Check engine running and monitor engine instruments.
3. Land as soon as possible at nearest suitable airport.

NOTE

When using the carburetor heating, engine power will decrease due to hot air suction from the heat exchanger.

If you fail to recover the engine power, land on the nearest airfield *(if possible)* or depending on the circumstances, perform a precautionary landing according to *3.10*.

3.20 Engine vibration

If any forced aircraft vibrations appear, it is necessary:

1. To set engine speed to such power rating where the vibrations are lowest.
2. To land on the nearest airfield or to perform a precautionary landing according to *3.10*.

3.21 Landing with a flat tire

1. During landing keep the damaged wheel above ground as long as possible using the ailerons control.
2. Maintain the direction on the landing roll out, applying rudder control.

3.22 Landing with a defective landing gear

1. If the main landing gear is damaged, perform touch-down at the lowest practicable speed and if possible, maintain direction during landing run.
2. If the nose wheel is damaged perform touch-down at the lowest practicable speed and hold the nose wheel above the ground by means of the elevator control as long as possible.

3.23 Loss of primary instruments

Flight instruments malfunction or failure

1. GPS - use for flight
2. Land as soon as practicable

CAUTION

GPS show ground speed only – take the surface wind into account!

Engine instruments malfunction or failure

1. **ENG INSTR** switch - ON
2. **ENG INSTR** circuit breaker - ON
3. Land as soon as practicable

CAUTION
Do not use maximum engine power without RPM indication!

3.24 Loss of flight controls

Lateral control failure

Use the Aileron Trim and Rudder for aircraft banking.

CAUTION
Avoid steep turns – more than 15° of bank!
Do not extend wing flaps!

Longitudinal control failure

Use the Elevator Trim and Throttle for aircraft longitudinal attitude change.

CAUTION
Avoid abrupt manoeuvres! Longer runway will be need for landing!
Do not extend wing flaps!

3.25 Throttle lever linkage cables failure

If power setting is not possible:

1. Ignition Switch - **OFF**
2. Airspeed - maintain *60 KIAS*
3. Emergency landing - perform according to *3.9*

3.26 Inadvertent canopy opening during takeoff

- During takeoff – aircraft rotation occurs, the canopy opens approximately *50 mm*.
- During climb and descent with airspeed at *60-75 KIAS,* the canopy stays opened *50-80 mm.*
- During horizontal flight with airspeed at *60-80 KIAS*, the canopy stays opened *50-80 mm.*
- In all above-mentioned cases – there are no flight problems, no vibrations, good aircraft control, and no change of flight characteristics.
- **It is not possible to close the canopy.**

Recommended procedure if the canopy opens during takeoff:

1. **DO NOT TRY TO CLOSE THE CANOPY!**
2. Continue the takeoff
3. Climb to the safe altitude
   - maintain airspeed at *62 KIAS*
4. Continue to fly the normal traffic pattern (circuit)
   - max. airspeed *75 KIAS*
5. Land
   - after stopping, close and lock the canopy

Recommendation: - Before takeoff, manually check the canopy is locked by pushing on the canopy upwards.

CAUTION
During the flight, approach and landing - do not perform any slipping.

Intentionally left blank

SECTION 4

TABLE OF CONTENTS

4. NORMAL PROCEDURES

4.1	**Preflight check**	**4-2**
4.2	**Engine starting**	**4-5**
4.3	**Taxiing**	**4-6**
4.4	**Normal takeoff**	**4-7**
4.5	**Climb**	**4-9**
4.6	**Best angle of climb speed *(V_x)***	**4-9**
4.7	**Best rate of climb speed *(V_y)***	**4-9**
4.8	**Cruise**	**4-9**
4.9	**Descend**	**4-9**
4.10	**Approach**	**4-10**
4.11	**Normal landing**	**4-10**
4.12	**Short field takeoff and landing procedures**	**4-11**
4.13	**Balked landing procedures**	**4-12**
4.14	**Airplane parking and tie-down**	**4-12**
4.15	**Noise characteristics**	**4-12**

4. NORMAL PROCEDURES

This section provides checklists and recommended procedures for normal operation of the aircraft.

CAUTION

*Airspeeds values are valid for standard **AVIATIK WA037383 pitot-static probe**.*
*These normal procedures are valid for **WOODCOMP KLASSIC 170/3/R** three composite blades ground adjustable propeller.*

4.1 Preflight check

Carry out the pre-flight inspection every day prior to the first flight or after airplane assembly. Incomplete or careless inspection can cause an accident. Carry out the inspection following the instructions in the Inspection Check List.

NOTE

The word "condition" in the instructions means a visual inspection of surface for damage deformations, scratching, chafing, corrosion or other damages, which may lead to flight safety degradation.

The manufacturer recommends carrying out the pre-flight inspection as follows:

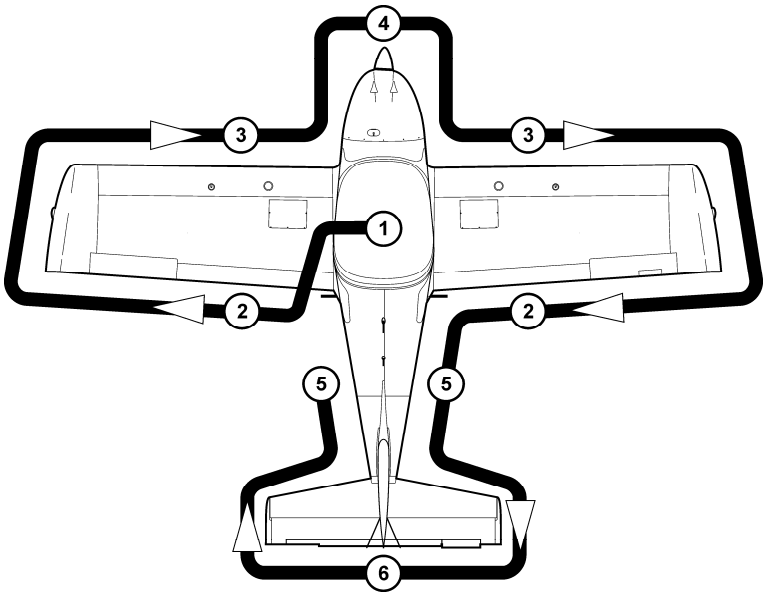

Inspection Check List

①	• Canopy	- condition of attachment, cleanness
	• Check cockpit for loose objects	
	Switches:	
	• Ignition	- **OFF**
	• **MASTER BAT**	- ON
	• **ENG INSTR**	- ON, check Battery voltage - check Engine instruments functioning - check Fuel quantity indication
	• **FLT INSTR**	- ON, check Electric attitude indicator, Electric directional gyro and Electric turn coordinator functioning
	• **AVIONICS**	- ON, check functioning of Transponder, Transceiver, Intercom and GPS
	• **NAV L**, **STROBE**, **LDG L**	- ON, check functioning
	• **COCKPIT L**, **INSTR L**	- ON, check functioning
	• Flight controls	- visual inspection, function, clearance, free movement up to stops, check wing flaps and trims operation
	• All switches	- OFF
	• **MASTER BAT**	- OFF
②	• Wing flap	- surface condition, attachment, clearance
	• Aileron	- surface condition, attachment, clearance, free movement, trim tab surface condition (*Right aileron only)*, attachment
	• Wing tip	- surface condition, strobe/nav. light attachment
③	• Wing upper surface	- condition, cleanness
	• Leading edge	- surface condition, cleanness
	• Wing locker	- closed and locked
	• Pitot head	- condition, attachment, cleanness - *Left wing only*

④	• Nose gear	- wheel, fairing and leg attachment, condition, pressure of tire
	• Engine cowling	- condition
	• Propeller and spinner	- condition
	• Engine mount and exhaust manifold	- condition, attachment
	• Oil quantity	- check (Before this check, ensure Ignition switch and **MASTER BAT** - OFF, open the oil tank and then turn the propeller by hand in direction of engine rotation several times to pump oil from the engine into the oil tank – this process is finished when air is returning back to the oil tank and can be noticed by a murmur from the open oil tank – see the Rotax Operator's manual.) - check oil level and replenish as required - close the oil tank
	• Coolant quantity	- check
	• Fuel and electrical system	- visual inspection
	• Fuel system	- draining
	• Other actions according to the engine manual	
⑤	• Main landing gear	- wheel, fairing, leg and brake attachment, condition, pressure of tire
	• Fuselage surface	- condition, cleanness
	• Antennas	- attachment
⑥	• Vertical tail unit	- condition of surface, attachment, free movement, rudder stops
	• Horizontal tail unit	- condition of surface, attachment, free movement, elevator stop - trim tab surface condition, attachment - anti-balance tab surface condition, attachment

CAUTION

Perform Weight and Balance check before flight.

WARNING

Physically check the fuel level before each takeoff to make sure you have sufficient fuel for the planned flight.

WARNING

In case of long-term parking it is recommended to turn the engine several times (Ignition Switch - OFF!) by turning the propeller. Always handle by palm the blade area i.e. do not grasp only the blade edge. It will facilitate engine starting.

4.2 Engine starting

4.2.1 Before engine starting

1. Flight controls - free & correct movement
2. Canopy - clean, close and lock
3. Safety harness - fasten
4. Brakes - fully applied
5. **PARKING BRAKE** - use

4.2.2 Engine starting

1. THROTTLE - **IDLE**
2. **CHOKE** - cold engine - **ON** *(fully pulled and hold)*
   - warm engine - **OFF**
3. **FUEL** selector - **LEFT** or **RIGHT** *(in accordance with fuel tanks filling)*; check correct position - green mark (see Chapter 7.11)
4. **MASTER BAT** - ON
5. **ENG INSTR** - ON
6. **FUEL P** - ON
7. Propeller area - clear
8. Ignition Switch - hold **START**
   after engine is starting - **BOTH**

After engine is running:

9. **MASTER GEN** - ON
10. **FLT INSTR** - ON
11. **AVIONICS** - ON
12. **FUEL P** - OFF
13. Other switches - ON as necessary
14. **CHOKE** - gradually release during engine warming up
15. THROTTLE - maintain max. *2,500 rpm* for warming up

CAUTION

- *The starter should be activated for a maximum of 10 sec, followed by 2 min pause for starter cooling.*
- *As soon as engine runs, adjust throttle to achieve smooth running at approx. 2,500 rpm.*
- *Check if oil pressure has risen within 10 sec. and monitor oil pressure. Increase of engine speed is only permitted at steady oil pressure readings above 2 bar.*
- *At an engine start with low oil temperature, continue to observe the oil pressure as it could drop again due to the increased flow resistance in the suction line. The number of revolutions may be only so far increased that the oil pressure remains steady.*
- *To prevent impact load, start the engine with throttle lever in idle position or at the most up to 10 % open.*

4.2.3 Engine warm up

Prior to engine check block the main wheels using chocks. Initially warm up the engine to *2,000 rpm* for approximately *2 min*, then continue to *2,500 rpm* till oil temperature reaches *50 °C*. The warm up period depends on ambient air temperature. Check temperatures and pressures.

4.3 Taxiing

1. Flaps - retracted *(0°)*
2. **PARKING BRAKE** - release
3. Brakes - function check at taxiing start

Apply power and brakes as needed. Apply brakes to control movement on ground. Taxi carefully when wind velocity exceeds *20 knots*. Hold the control stick in neutral position.

NOTE

During the airplane waiting maintain the engine speed within the range from 2,100 to 2,300 rpm.

For hot temperature conditions:

- *Restrict engine running at ground to the shortest time only*
- *Avoid or limit taxiing in downwind or "wind blowing from the right side " position if possible*
- *In case the CT is close to the limit, reduce the temperature by turning the airplane in an head-wind or "wind from the left side" position and set rpm to 2,100-2,300*

4.4 Normal Takeoff

4.4.1 Engine run-up

CAUTION

The engine run-up should be performed with the aircraft heading upwind and not on a loose terrain (the propeller may suck grit which can damage the leading edges of blades).

1.	Brakes	- fully applied
2.	Throttle	- **MAX**
3.	Engine speed	- check *(5,000 ±100 rpm – wind calm)*
4.	Engine gauges	- within limits
5.	Throttle	- **IDLE**
6.	Engine acceleration	- check

CAUTION

To prevent impact load, wait for around 3 sec. after throttling back to partial load to reach constant speed before re-acceleration.

7.	Ignition check	- set engine speed to *4,000 rpm* - switch ignition gradually to **L – BOTH – R – BOTH** (Max. engine speed drop with only one ignition circuit must not exceed ***300 rpm***. Max. engine speed drop difference between circuits **L** and **R** should be ***115 rpm***.)
8.	**CARBURETOR AIR**	- **PULL HOT** - check carburetor preheating function (Engine speed drop approximately *50 rpm*.) - push OFF
9.	Throttle	- **IDLE**

NOTE

For checking the two ignition circuits, only one circuit may be switched OFF and ON at a time.

4.4.2 Before takeoff

NOTE
Aileron trim tab position can be checked visually from cockpit by view to the right.

1. Altimeter - set
2. Trims - set neutral position
3. Flight controls - check free movement
4. Cockpit canopy - closed and locked

Recommendation: - Before takeoff, manually check the canopy is locked by pushing the canopy upwards.

5. Safety harness - fastened
6. **FUEL** selector - **LEFT** or **RIGHT***;* check correct position - green mark (see Chapter 7.11)
7. Ignition switch - **BOTH**
8. Flaps - takeoff position *(12°)*

4.4.3 Takeoff

1. THROTTLE - **MAX**
2. Engine speed - check *(5,000 ±100 rpm – wind calm)*
3. Engine gauges - within limits
4. Elevator control - neutral position
   - at *30 - 34 KIAS* pull slightly to lift the nose wheel
5. Airplane unstick - at *40 - 44 KIAS*
6. Climb - after reaching airspeed *62 KIAS*
7. Brakes - apply
8. Flaps - retract *(0°)* at safe altitude
   (max. airspeed for flaps using is 75 KIAS)
9. Trims - as necessary

WARNING

Takeoff is prohibited if:

- *Engine is running unsteadily, roughly or with vibrations*
- *Engine instrument values are beyond operational limits*
- *Aircraft systems (e.g. brakes, controls or avionics) working incorrectly*
- *Crosswind velocity exceeds permitted limits (see Section 5 Performance, 5.7 Demonstrated wind performance)*

4.5 Climb

1. THROTTLE - **MAX** *(max. 5,800 rpm for max. 5 min,* max. continuous power *5,500 rpm)*
2. Airspeed - *V_x = 55 KIAS*
   - *V_y = 62 KIAS*
3. Trims - as necessary
4. Engine gauges - within limits

CAUTION

If the cylinder head temperature or oil temperature and/or coolant temperature approaches or exceeds limits, reduce the climb angle to increase airspeed and possibly return within limits. If readings do not improve, troubleshoot causes other than high power setting at low airspeed.

4.6 Best angle of climb speed (V_x): *55 KIAS*

4.7 Best rate of climb speed (V_y): *62 KIAS*

4.8 Cruise

Refer to Section 5, for recommended cruising figures.

4.9 Descend

1. Optimum glide speed - *60 KIAS*

4.10 Approach

1. Approach speed - *60 KIAS*
2. THROTTLE - as necessary
3. Flaps - takeoff position *(12°)*
4. Trims - as necessary
5. Safety harness - fasten

CAUTION

It is not advisable to reduce the engine throttle control lever to minimum on final approach and when descending from very high altitude. In such cases the engine becomes under-cooled and a loss of power may occur. Descent at increased idle (approximately 3,000 rpm), airspeed 60-75 KIAS and check that the engine instruments indicate values within permitted limits.

4.11 Normal landing

4.11.1 Before landing

1. THROTTLE - as necessary
2. Airspeed - *60 KIAS*
3. Flaps - landing position *(30°)*
4. Trims - as necessary

4.11.2 Landing

1. THROTTLE - **IDLE**
2. Touch-down on main wheels
3. Apply brakes - as necessary
   (after the nose wheel touch-down)

4.11.3 After landing

1. Flaps - retract *(0°)*
2. THROTTLE - engine RPM set as required for taxiing
3. Trims - set neutral position

4.11.4 Engine shut down

1. THROTTLE - **IDLE**
2. Instruments - engine instruments within limits
3. Ignition Switch - **OFF**
4. Switches - OFF
5. **MASTER BAT** & **GEN** - OFF
6. **FUEL** selector - **OFF**

CAUTION

Rapid engine cooling should be avoided during operation. This happens above all during aircraft descent, taxiing and low engine rpm or at engine shutdown immediately after landing.

Under normal conditions the engine temperatures stabilize during descent, taxiing and at values suitable to stop engine by switching the ignition off. If necessary, cool the engine at engine speed within the range 2,100 to 2,300 rpm to stabilize the temperatures prior to engine shut down.

4.12 Short field takeoff and landing procedures

None

4.13 Balked landing procedures

1. THROTTLE - **MAX**
   (max. 5,800 rpm for max. 5 min,
   max. continuous power *5,500 rpm)*
2. Airspeed - min. *60 KIAS*
3. Flaps - takeoff position *(12°)*
   (max. airspeed for flaps using is 75 KIAS)
4. Trims - as necessary
5. Climb - after reaching *62 KIAS*
6. Flaps - retract *(0°)* at safe altitude
   (max. airspeed for flaps using is 75 KIAS)
7. Trims - as necessary

4.14 Aircraft parking and tie-down

1. Ignition Switch - **OFF**
2. **MASTER BAT** & **GEN** - OFF
3. **FUEL** selector - **OFF**
4. Parking brake - as necessary
5. Canopy - close, lock as necessary
6. Secure the airplane

NOTE

It is recommended to use parking brake for short-time parking only, between flights during a flight day. After ending the flight day or at low temperatures of ambient air, do not use parking brake, but use the wheel chocks instead.

NOTE

Use anchor eyes on the wings and fuselage rear section to fix the airplane. Move control stick forward and fix it together with the rudder pedals. Make sure that the cockpit canopy is properly closed and locked.

4.15 Noise characteristics

The noise level in accordance with requirements of the CS-36, Am.2 (ICAO Annex 16, Volume I, Chapter 10 - 10.4 b) has been established as *64.4 ± 1.2 dB(A)*

SECTION 5

TABLE OF CONTENTS

5. PERFORMANCE

5.1	**Takeoff distances**	**5-3**
5.2	**Landing distances**	**5-3**
5.3	**Rate of climb**	**5-3**
5.4	**Cruise speeds**	**5-4**
5.5	**RPM setting and fuel consumption**	**5-5**
5.6	**Airspeed indicator system calibration**	**5-10**
5.7	**Demonstrated wind performance**	**5-11**

5. PERFORMANCE

The presented data has been computed from actual flight tests with the aircraft and engine in good conditions and using average piloting techniques.
If not stated otherwise, the performance stated in this section is valid for maximum takeoff weight *600 kg* and under ISA conditions.

The performance shown in this section is valid for aircraft equipped with ***ROTAX 912 912 S2*** / ***ULS*** engine with maximum power *73.5 kW* and ***WOODCOMP KLASSIC 170/3/R*** three composite blades ground adjustable propeller with pitch setting *17.5 ±0.5°*.

CAUTION
*Airspeed values are valid for standard **AVIATIK WA037383 pitot-static probe**.*

5.1 Takeoff distances

Conditions: - Altitude: *0 ft* ISA
- Engine power: *max. takeoff*
- Flaps: *12°*

RUNWAY SURFACE	**Takeoff run distance**		**Takeoff distance over *50 ft (15 m)* obstacle**	
	ft	*m*	*ft*	*m*
CONCRETE	*463*	*141*	*1,270*	*387*
GRASS	*702*	*214*	*1,499*	*457*

5.2 Landing distances

Conditions: - Altitude: *0 ft* ISA
- Engine power: *dle*
- Flaps: *30°*
- Brakes fully depressed immediately after touch-down

RUNWAY SURFACE	**Landing distance over *50 ft (15 m)* obstacle**		**Landing run distance (braked)**	
	ft	*m*	*ft*	*m*
CONCRETE	*1,188*	*362*	*479*	*146*
GRASS	*1,109*	*338*	*364*	*111*

5.3 Rate of climb

Conditions: Engine: *max. takeoff* Flaps: *0°*	**Best rate of climb speed Vy**	**Rate of climb Vz**
Altitude	*KIAS*	*fpm*
0 ft	*62*	*825*
1,000 ft	*62*	*783*
3,000 ft	*62*	*685*
5,000 ft	*62*	*576*
7,000 ft	*62*	*472*
9,000 ft	*62*	*355*

5.4 Cruise speeds

Altitude	Engine speed	Airspeeds			MAP	Fuel consumption
ft	*rpm*	*KIAS*	*KCAS*	*KTAS*	*in Hg*	*l/h*
1,000	4,200	*72*	*72*	*73*	*23.7*	*13.6*
	4,500	*81*	*80*	*81*	*24.6*	*15.7*
	4,800	*91*	*89*	*89*	*25.5*	*18.0*
	5,000	*96*	*94*	*95*	*26.1*	*19.5*
	5,300	*105*	*102*	*103*	*27.0*	*21.9*
	5,500	*112*	*108*	*109*	*27.7*	*23.7*
	5,700	*118*	*113*	*114*	*28.3*	*25.8*
3,000	4,200	*68*	*69*	*72*	*22.2*	*13.2*
	4,500	*78*	*77*	*80*	*23.0*	*15.3*
	4,800	*86*	*85*	*88*	*23.8*	*17.5*
	5,000	*93*	*91*	*94*	*24.3*	*19.0*
	5,300	*102*	*99*	*102*	*25.1*	*21.4*
	5,500	*108*	*104*	*108*	*25.5*	*23.3*
5,000	4,200	*65*	*66*	*71*	*20.5*	*12.9*
	4,500	*74*	*74*	*79*	*21.3*	*14.9*
	4,800	*83*	*82*	*87*	*22.1*	*17.2*
	5,000	*89*	*87*	*93*	*22.7*	*18.7*
	5,300	*97*	*95*	*101*	*23.5*	*21.1*
	5,500	*103*	*100*	*107*	*24.1*	*22.8*
7,000	4,200	*62*	*63*	*69*	*19.3*	*12.5*
	4,500	*69*	*70*	*77*	*20.0*	*14.6*
	4,800	*79*	*78*	*85*	*20.6*	*16.8*
	5,000	*84*	*83*	*91*	*21.2*	*18.4*
	5,300	*92*	*90*	*99*	*22.0*	*20.8*
	5,500	*98*	*95*	*105*	*22.5*	*22.3*
9,000	4,200	*57*	*59*	*67*	*18.4*	*12.2*
	4,500	*64*	*65*	*74*	*19.0*	*14.3*
	4,800	*73*	*73*	*83*	*19.6*	*16.4*
	5,000	*79*	*78*	*89*	*20.0*	*18.0*
	5,300	*86*	*85*	*97*	*20.5*	*20.4*
	5,500	*92*	*90*	*103*	*20.8*	*21.8*

5.5 RPM setting and fuel consumption

Altitude	*ft*	***1,000***					
Engine speed	*rpm*	***4,200***	***4,500***	***4,800***	***5,000***	***5,300***	***5,500***
Fuel consumption	*l/h*	*13.6*	*15.7*	*18.0*	*19.5*	*21.9*	*23.7*
Airspeeds	*KIAS*	*72*	*81*	*91*	*96*	*105*	*112*
	KCAS	*72*	*80*	*89*	*94*	*102*	*108*
	KTAS	*73*	*81*	*89*	*95*	*103*	*109*
Endurance and Range at 113 liters							
Endurance	*hh:mm*	*8:18*	*7:11*	*6:16*	*5:47*	*5:09*	*4:46*
Range	*NM*	*607*	*583*	*559*	*551*	*531*	*520*
	km	*1123*	*1080*	*1035*	*1020*	*984*	*962*
Endurance and Range at 90 liters							
Endurance	*hh:mm*	*6:37*	*5:43*	*5:00*	*4:36*	*4:06*	*3:47*
Range	*NM*	*483*	*464*	*445*	*438*	*423*	*414*
	km	*895*	*860*	*824*	*812*	*784*	*767*
Endurance and Range at 60 liters							
Endurance	*hh:mm*	*4:24*	*3:49*	*3:20*	*3:04*	*2:44*	*2:31*
Range	*NM*	*322*	*310*	*297*	*292*	*282*	*276*
	km	*596*	*573*	*549*	*541*	*523*	*511*
Endurance and Range at 30 liters							
Endurance	*hh:mm*	*2:12*	*1:54*	*1:40*	*1:32*	*1:22*	*1:15*
Range	*NM*	*161*	*155*	*148*	*146*	*141*	*138*
	km	*298*	*287*	*275*	*271*	*261*	*256*
Endurance and Range at 15 liters							
Endurance	*hh:mm*	*1:06*	*0:57*	*0:50*	*0:46*	*0:41*	*0:37*
Range	*NM*	*81*	*77*	*74*	*73*	*71*	*69*
	km	*149*	*143*	*137*	*135*	*131*	*128*

Altitude	*ft*	***3,000***					
Engine speed	*rpm*	***4,200***	***4,500***	***4,800***	***5,000***	***5,300***	***5,500***
Fuel consumption	*l/h*	*13.2*	*15.3*	*17.5*	*19.0*	*21.4*	*23.3*
Airspeeds	*KIAS*	*68*	*78*	*86*	*93*	*102*	*108*
	KCAS	*69*	*77*	*85*	*91*	*99*	*104*
	KTAS	*72*	*80*	*88*	*94*	*102*	*108*
Endurance and Range at 113 liters							
Endurance	*hh:mm*	*8:33*	*7:23*	*6:27*	*5:56*	*5:16*	*4:50*
Range	*NM*	*616*	*591*	*568*	*559*	*539*	*524*
	km	*1142*	*1094*	*1052*	*1035*	*997*	*970*
Endurance and Range at 90 liters							
Endurance	*hh:mm*	*6:49*	*5:52*	*5:08*	*4:44*	*4:12*	*3:51*
Range	*NM*	*491*	*471*	*453*	*445*	*429*	*417*
	km	*909*	*872*	*838*	*825*	*794*	*773*
Endurance and Range at 60 liters							
Endurance	*hh:mm*	*4:32*	*3:55*	*3:25*	*3:09*	*2:48*	*2:34*
Range	*NM*	*327*	*314*	*302*	*297*	*286*	*278*
	km	*606*	*581*	*559*	*550*	*530*	*515*
Endurance and Range at 30 liters							
Endurance	*hh:mm*	*2:16*	*1:57*	*1:42*	*1:34*	*1:24*	*1:17*
Range	*NM*	*164*	*157*	*151*	*148*	*143*	*139*
	km	*303*	*291*	*279*	*275*	*265*	*258*
Endurance and Range at 15 liters							
Endurance	*hh:mm*	*1:08*	*0:58*	*0:51*	*0:47*	*0:42*	*0:38*
Range	*NM*	*82*	*78*	*75*	*74*	*71*	*70*
	km	*152*	*145*	*140*	*137*	*132*	*129*

Altitude	*ft*	***5,000***					
Engine speed	*rpm*	***4,200***	***4,500***	***4,800***	***5,000***	***5,300***	***5,500***
Fuel consumption	*l/h*	*12.9*	*14.9*	*17.2*	*18.7*	*21.1*	*22.8*
Airspeeds	*KIAS*	*65*	*74*	*83*	*89*	*97*	*103*
	KCAS	*66*	*74*	*82*	*87*	*95*	*100*
	KTAS	*71*	*79*	*87*	*93*	*101*	*107*
Endurance and Range at 113 liters							
Endurance	*hh:mm*	*8:45*	*7:35*	*6:34*	*6:02*	*5:21*	*4:57*
Range	*NM*	*622*	*599*	*572*	*562*	*541*	*530*
	km	*1152*	*1110*	*1059*	*1041*	*1002*	*982*
Endurance and Range at 90 liters							
Endurance	*hh:mm*	*6:58*	*6:02*	*5:13*	*4:48*	*4:15*	*3:56*
Range	*NM*	*495*	*477*	*455*	*448*	*431*	*422*
	km	*917*	*884*	*843*	*829*	*798*	*782*
Endurance and Range at 60 liters							
Endurance	*hh:mm*	*4:39*	*4:01*	*3:29*	*3:12*	*2:50*	*2:37*
Range	*NM*	*330*	*318*	*303*	*298*	*287*	*282*
	km	*612*	*589*	*562*	*553*	*532*	*521*
Endurance and Range at 30 liters							
Endurance	*hh:mm*	*2:19*	*2:00*	*1:44*	*1:36*	*1:25*	*1:18*
Range	*NM*	*165*	*159*	*152*	*149*	*144*	*141*
	km	*306*	*295*	*281*	*276*	*266*	*261*
Endurance and Range at 15 liters							
Endurance	*hh:mm*	*1:09*	*1:00*	*0:52*	*0:48*	*0:42*	*0:39*
Range	*NM*	*83*	*80*	*76*	*75*	*72*	*70*
	km	*153*	*147*	*141*	*138*	*133*	*130*

Altitude	*ft*	***7,000***					
Engine speed	*rpm*	***4,200***	***4,500***	***4,800***	***5,000***	***5,300***	***5,500***
Fuel consumption	*l/h*	*12.5*	*14.6*	*16.8*	*18.4*	*20.8*	*22.3*
Airspeeds	*KIAS*	*62*	*69*	*79*	*84*	*92*	*98*
	KCAS	*63*	*70*	*78*	*83*	*90*	*95*
	KTAS	*69*	*77*	*85*	*91*	*99*	*105*
Endurance and Range at 113 liters							
Endurance	*hh:mm*	*9:02*	*7:44*	*6:43*	*6:08*	*5:25*	*5:04*
Range	*NM*	*624*	*596*	*572*	*559*	*538*	*532*
	km	*1155*	*1104*	*1059*	*1035*	*996*	*985*
Endurance and Range at 90 liters							
Endurance	*hh:mm*	*7:12*	*6:09*	*5:21*	*4:53*	*4:19*	*4:02*
Range	*NM*	*497*	*475*	*455*	*445*	*428*	*424*
	km	*920*	*879*	*843*	*824*	*793*	*785*
Endurance and Range at 60 liters							
Endurance	*hh:mm*	*4:48*	*4:06*	*3:34*	*3:15*	*2:53*	*2:41*
Range	*NM*	*331*	*316*	*304*	*297*	*286*	*283*
	km	*613*	*586*	*562*	*550*	*529*	*523*
Endurance and Range at 30 liters							
Endurance	*hh:mm*	*2:24*	*2:03*	*1:47*	*1:37*	*1:26*	*1:20*
Range	*NM*	*166*	*158*	*152*	*148*	*143*	*141*
	km	*307*	*293*	*281*	*275*	*264*	*262*
Endurance and Range at 15 liters							
Endurance	*hh:mm*	*1:12*	*1:01*	*0:53*	*0:48*	*0:43*	*0:40*
Range	*NM*	*83*	*79*	*76*	*74*	*71*	*71*
	km	*153*	*147*	*141*	*137*	*132*	*131*

Altitude	*ft*	***9,000***					
Engine speed	*rpm*	***4,200***	***4,500***	***4,800***	***5,000***	***5,300***	***5,500***
Fuel consumption	*l/h*	*12.2*	*14.3*	*16.4*	*18.0*	*20.4*	*21.8*
Airspeeds	*KIAS*	*57*	*64*	*73*	*79*	*86*	*92*
	KCAS	*59*	*65*	*73*	*78*	*85*	*90*
	KTAS	*67*	*74*	*83*	*89*	*97*	*103*
Endurance and Range at 113 liters							
Endurance	*hh:mm*	*9:15*	*7:54*	*6:53*	*6:16*	*5:32*	*5:11*
Range	*NM*	*621*	*585*	*572*	*559*	*537*	*534*
	km	*1149*	*1083*	*1059*	*1035*	*995*	*989*
Endurance and Range at 90 liters							
Endurance	*hh:mm*	*7:22*	*6:17*	*5:29*	*5:00*	*4:24*	*4:07*
Range	*NM*	*494*	*466*	*455*	*445*	*428*	*425*
	km	*915*	*863*	*844*	*824*	*793*	*788*
Endurance and Range at 60 liters							
Endurance	*hh:mm*	*4:55*	*4:11*	*3:39*	*3:20*	*2:56*	*2:45*
Range	*NM*	*330*	*310*	*304*	*297*	*285*	*283*
	km	*610*	*575*	*562*	*549*	*528*	*525*
Endurance and Range at 30 liters							
Endurance	*hh:mm*	*2:27*	*2:05*	*1:49*	*1:40*	*1:28*	*1:22*
Range	*NM*	*165*	*155*	*152*	*148*	*143*	*142*
	km	*305*	*288*	*281*	*275*	*264*	*263*
Endurance and Range at 15 liters							
Endurance	*hh:mm*	*1:13*	*1:02*	*0:54*	*0:50*	*0:44*	*0:41*
Range	*NM*	*82*	*78*	*76*	*74*	*71*	*71*
	km	*153*	*144*	*141*	*137*	*132*	*131*

5.6 Airspeed indicator system calibration

KIAS	KCAS
30	36
35	40
40	45
45	49
50	53
55	57
60	62
65	66
70	71
75	75
80	79
85	83
90	88
95	92
100	97
105	101
110	106
115	111
120	115
125	120
130	125
135	130
140	134

5.7 Demonstrated wind performance

Max. demonstrated headwind velocity for take-off and landing:..... *24 knots*

Max. demonstrated crosswind velocity for take-off and landing:.... *12 knots*

Wind components figure

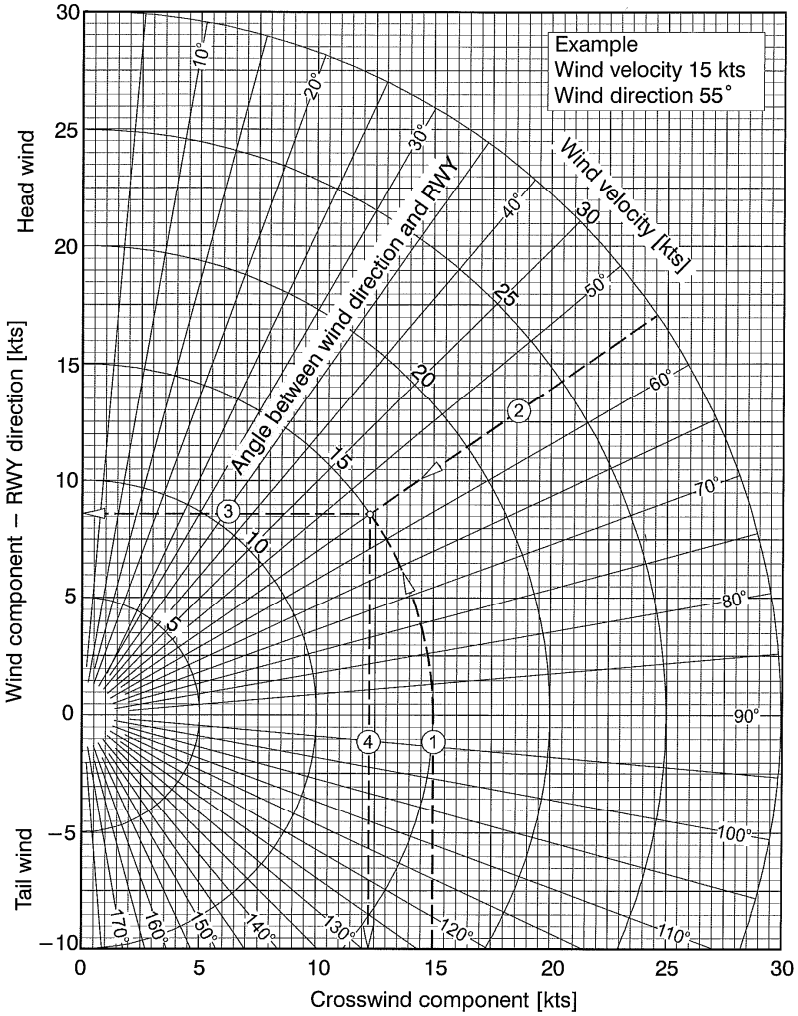

Example: *1. Wind velocity ..... 15 knots*
2. Wind direction..... 55°
3. Headwind component ..... 8.6 knots
4. Crosswind component..... 12.3 knots

Intentionally left blank

SECTION 6

TABLE OF CONTENTS

6. WEIGHT AND BALANCE

6.1	**Introduction**	**6-2**
6.2	**Airplane weighing procedure**	**6-2**
6.3	**Operating weights and loading**	**6-3**
6.4	**Weight and balance C.G. layout**	**6-4**
6.5	**C.G. range and determination**	**6-4**
6.6	**Loading and C.G. check**	**6-7**
6.7	**Fuel weight – quantity conversion chart**	**6-11**
6.8	**C.G. change in dependence of fuel quantity**	**6-11**
6.9	**Load sheet and Balance chart**	**6-12**
6.10	**Installed equipment list**	**6-15**

6. WEIGHT AND BALANCE

6.1 Introduction

This section contains weight and balance records and the payload range for safe operation of *PS-28 Cruiser* aircraft.

Procedures for weighing the aircraft and the calculation method for establishing the permitted payload range are contained in FAA Aviation Advisory Circular AC.43.13 – 1B.

6.2 Airplane weighing procedure

1. Preparation

- remove all impurities from the aircraft as well as further undesirable objects
- inflate tires to recommended operating pressure
- drain fuel from fuel installation
- add oil, hydraulic and cooling liquid up to the maximum specified value
- retract wing flaps, close the canopy and other lids and covers, remove control surfaces blocking
- level the airplane according to the rivet line located on the fuselage (on LH and RH sides) under the canopy frame

2. Leveling

- Place scales under each wheel
- Deflate the nose tire and/or lower or raise the nose strut to properly center the bubble in the level.

3. Weighing

- With the airplane level and brakes released, record the weight shown on each scale. Deduct the tare, if any, from each reading.

4. Measuring

- The DATUM (reference plane) for arms measuring is on the wing leading edge Rib No.4.
- Obtain measurement LR and LL by measuring horizontally (along the airplane center line) from a line stretched between datum on the left and right wing.

- Obtain measurement LN by measuring horizontally and parallel to the airplane center line, from center of nose wheel axle left sides, to the datum on the left wing. Repeat on right side and average the measurements.

5. Using weights from item 3 and measurements from item 4 the airplane weight and C.G. can be determined.

6. Basic Empty Weight may be determined by completing appropriate table.

6.3 Operating weights and loading

Weights:

Max. takeoff weight ..... *600 kg*
Max landing weight ..... *600 kg*
Max. weight of fuel ..... *82 kg*
Max. baggage weight in rear fuselage ..... *18 kg*
Max. baggage weight in each wing locker ..... *10 kg*
Maximum empty weight ..... *405 kg*

Crew:

Number of seats *2*
Minimum crew *(only on the left seat)* ..... *1* pilot
Minimum crew weight ..... *55 kg*
Maximum crew weight on each seat ..... *115 kg*

Arms:

Pilot/Passenger ..... *700 mm*
Baggage compartment ..... *1,310 mm*
Wing lockers ..... *600 mm*
Fuel tanks ..... *180 mm*

NOTE

Actual Empty weight is shown in Section 9, Supplement No. 02.

NOTE

For the needs of this Handbook the fuel specific weight of 0.72 kg / L was used to convert volume units into weight units.

6.4 Weight and balance C.G. layout

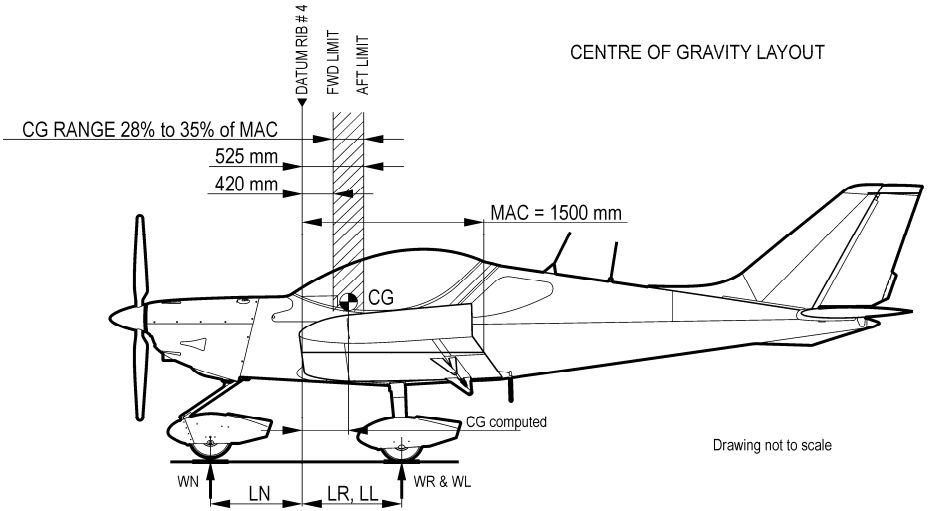

6.5 C.G. range and determination

6.5.1 Aircraft C.G. range:

Empty weight C.G. range .....*28.5 to 29.5 %* of MAC
427.5 to 442.5 mm of MAC

Operating C.G. range .....*28 to 35 %* of MAC
420 to 525 mm of MAC

6.5.2 Aircraft C.G. determination

After any changes in equipment or if the aircraft weight is affected by any alternation or repair, a new weighing and C.G. determination perform as follows:

Aircraft empty weight C.G. determination

1. Aircraft weighing according to 6.2.
2. Record weight and arm values to the aircraft empty weight C.G. table, nose wheel arm is negative (-).
3. Calculate and record moment for each of the main and nose wheels using the following formula:

MOMENT (kg mm) = WEIGHT (kg) x ARM (mm)

Nose wheel moment is negative (-).

4. Calculate and record total weight and moment.
5. Determine and record empty weight C.G. using the following formula:

$$\text{AIRCRAFT EMPTY WEIGHT C.G.} = \frac{M_{TE}}{W_{TE}}\ (mm) \times \frac{100}{MAC}\ (\%)\ \text{of MAC}$$

Aircraft empty weight C.G. determination table

	ITEM	WEIGHT kg	ARM mm	MOMENT kg mm
AIRCRAFT EMPTY C.G.	RIGHT MAIN WHEEL	W_R =	L_R =	
	LEFT MAIN WHEEL	W_L =	L_L =	
	NOSE WHEEL	W_N =	L_N = - negative arm	-
	TOTAL	Empty weight: W_{TE} =	C.G.= mm % MAC	Aircraft moment: M_{TE} =

NOTE: *Empty weight is including oil, coolant, hydraulic fluid and unusable fuel.*

NOTE

Actual Weight and Balance record this aircraft is shown in Section 9, Supplement No. 02.

Blank form of Weight & Balance record

WEIGHT & BALANCE RECORD

Empty weight C.G. determination table

	ITEM	WEIGHT kg	ARM mm	MOMENT kg mm
AIRCRAFT EMPTY C.G.	RIGHT MAIN WHEEL	W_R =	L_R =	
	LEFT MAIN WHEEL	W_L =	L_L =	
	NOSE WHEEL	W_N =	L_N = - negative arm	-
	TOTAL	Empty weight: W_{TE} =	C.G. = mm % MAC	Aircraft moment: M_{TE} =

NOTE:

Empty weight is including oil, coolant, hydraulic fluid and unusable fuel.

Empty weight C.G. range : *427.5 to 442.5 mm / 28.5 to 29.5 % of MAC*

Operating C.G. range : *420 to 525 mm / 28 to 35 % of MAC*

MAC : *1,500 mm*

MOMENT (kg mm) = WEIGHT (kg) x ARM (mm)

$$\text{AIRCRAFT EMPTY WEIGHT C.G.} = \frac{M_{TE}}{W_{TE}} \text{ (mm) } x \frac{100}{MAC} \text{ (\%) of MAC}$$

Registration:
Serial No.:
Date:
By:

6.6 Loading and C.G. check

Before flight is important to determine that the aircraft is loaded so its weight and C.G. location are within the allowable limits.
Aircraft loading and C.G. determination perform as follows:

1. Record actual empty weight, arm and moment to the table.
2. Record weights of pilot, passenger, baggage and fuel to the table.
3. Calculate and record moment for each item using the following formula:

$$MOMENT\ (kg\ mm) = WEIGHT\ (kg) \times ARM\ (mm)$$

4. Calculate and record total weight and moment.
5. Determine and record aircraft C.G. using the following formula:

$$AIRCRAFT\ C.G. = \frac{M_T}{W_T}\ (mm) \times \frac{100}{MAC}\ (\%)\ of\ MAC$$

6. If loading or C.G. calculation results exceed maximum permitted values, reduce baggage or fuel weight and repeat calculation.
7. It is important to perform loading and C.G. check without fuel (in case of total fuel depletion) – most rearward C.G. check.

Loading and C.G. check table

ITEM	***WEIGHT*** *kg*	***ARM*** *mm*	***MOMENT*** *kg mm*
EMPTY AIRCRAFT			
PILOT		*700*	
PASSENGER		*700*	
BAGGAGE COMPARTMENT		*1,310*	
WING LOCKERS		*600*	
FUEL IN TANKS		*180*	
TOTAL	$W_T =$	***C.G.*** = *mm* / *% MAC*	$M_T =$

Example of Loading and C.G. check

Aircraft empty data:

weight..... *387.0 kg*
arm..... *432.4 mm*
moment..... *167,329.0 kg mm*
MAC ..... *1,500 mm*

Operating weights:

pilot ..... *85.0 kg*
passenger ..... *65.0 kg*
baggage in cockpit..... *10.0 kg*
baggage in wing lockers ..... *10.0 kg*
fuel in tanks..... *43.0 kg (60 L)*

Loading and C.G. check table

ITEM	***WEIGHT*** *kg*	***ARM*** *mm*	***MOMENT*** *kg mm*
EMPTY AIRCRAFT	*387.0*	*432.4*	*167,329.0*
PILOT	*85.0*	*700*	*59,500.0*
PASSENGER	*65.0*	*700*	*45,500.0*
BAGGAGE COMPARTMENT	*10.0*	*1,310*	*13,100.0*
WING LOCKERS	*10.0*	*600*	*6,000.0*
FUEL IN TANKS	*43.0*	*180*	*7,740.0*
TOTAL	***W_T = 600.0***	***C.G.*** *= **498.6** mm* ***33.2*** *% MAC*	***M_T = 299,169.0***

Loading and C.G. check table – zero fuel

ITEM	***WEIGHT*** *kg*	***ARM*** *mm*	***MOMENT*** *kg mm*
EMPTY AIRCRAFT	*387.0*	*432.4*	*167,329.0*
PILOT	*85.0*	*700*	*59,500.0*
PASSENGER	*65.0*	*700*	*45,500.0*
BAGGAGE COMPARTMENT	*10.0*	*1,310*	*13,100.0*
WING LOCKERS	*10.0*	*600*	*6,000.0*
FUEL IN TANKS	*0.0*	*180*	*0.0*
TOTAL	W_T = ***557.0***	***C.G.*** = ***523.2*** *mm* ***34.9*** *% MAC*	M_T = ***291,429.0***

Blank form of Loading and C.G. check

WEIGHT & BALANCE RECORD

Aircraft C.G. check table

ITEM	***WEIGHT*** *kg*	***ARM*** *mm*	***MOMENT*** *kg mm*
EMPTY AIRCRAFT			
PILOT		*700*	
PASSENGER		*700*	
BAGGAGE COMPARTMENT		*1,310*	
WING LOCKERS		*600*	
FUEL IN TANKS		*180*	
TOTAL	W_T =	***C.G.*** = mm % MAC	M_T =

NOTE:

Empty weight is including oil, coolant, hydraulic fluid and unusable fuel.

Maximum fuel quantity in wing tanks (114L=82.1kg) is used for most forward C.G. calculation.

Zero fuel quantity in wing tanks is used for most rearward C.G. calculation (in case of total fuel depletion).

Max. takeoff weight : *600 kg*

Max. weight in baggage compartment : *18 kg*

Max. weight in each wing locker : *10 kg*

Empty weight C.G. range : *427.5 to 442.5 mm / 28.5 to 29.5 % of MAC*

Operating C.G. range : *420 to 525 mm / 28 to 35 % of MAC*

MAC : *1,500 mm*

MOMENT (kg mm) = WEIGHT (kg) x ARM (mm)

$$\text{AIRCRAFT C.G.} = \frac{M_T}{W_T}\ (\text{mm}) \times \frac{100}{MAC}\ (\%)\ \text{of MAC}$$

Registration:
Serial No.:
Date:
By:

6.7 Fuel weight – quantity conversion chart

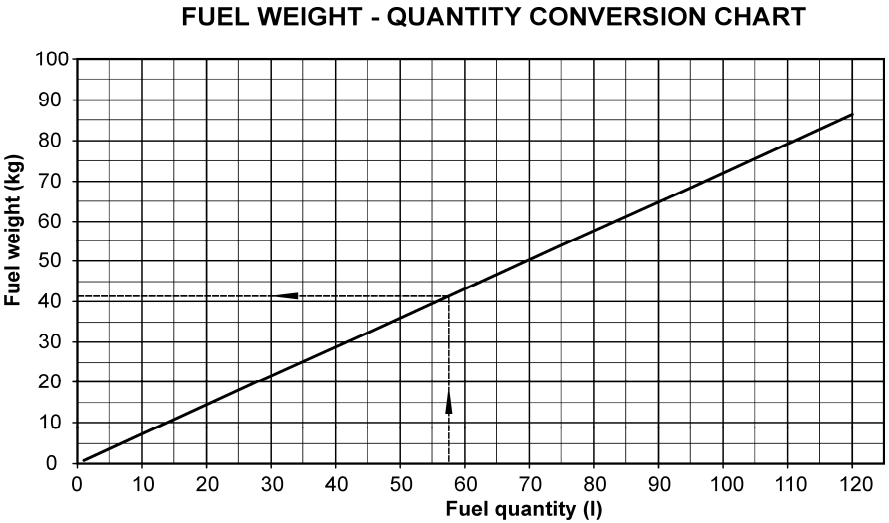

6.8 C.G. change in dependence of fuel quantity

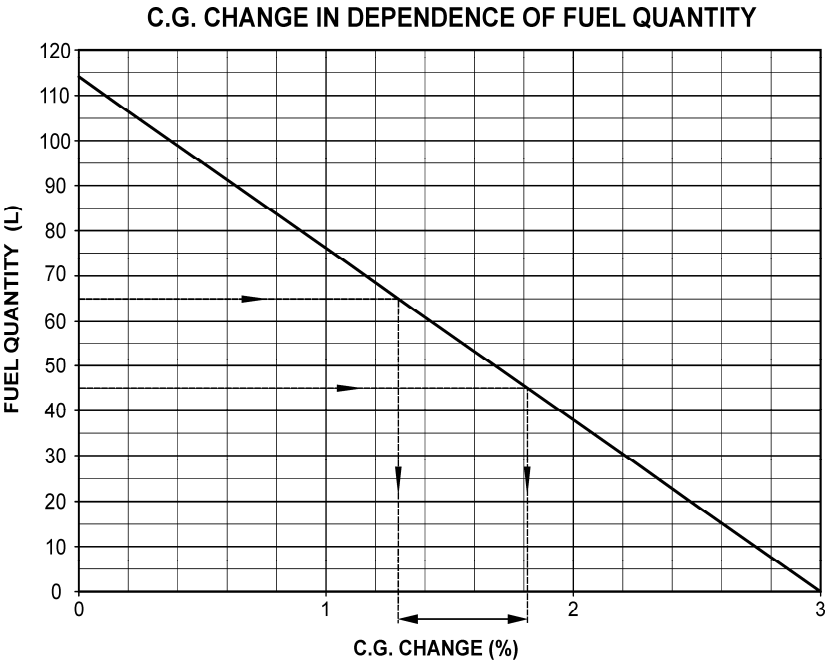

6.9 Load sheet and Balance chart

This chart makes possible to perform loading and C.G. check before flight simply and quickly. The undermentioned example shows how to use this chart. Perform following steps:

1. Record Empty weight and Empty C.G. *(% of MAC)* to the table.
2. Record the other used weight items to the table.
3. Calculate Total weight and record to the table.
4. Calculate Zero fuel weight record to the table – it is total weight without fuel weight (for most rearward C.G. check - in case of total fuel depletion).
5. The starting position line drawing is the intersection point of empty weight with empty C.G. marked as ①.
6. Go vertically down to the pilot weight scale, than continue horizontally to the right direction and pilot weight add. This is the point ②.
7. Repeat step 6 for the other used weight items (point ③ ④ ⑤) except fuel weight that is subtracted to the left direction to the point ⑥.
8. Go vertically down to the larger Aircraft C.G. chart to the crossing with Total weight line. This is the point ⑦ - actual Aircraft C.G. location in % of MAC - for takeoff.
8. In the end go vertically down from point ⑤ to the larger Aircraft C.G. chart to the crossing with Zero fuel weight line. This is the point ⑧ most rearward aircraft C.G. in % of MAC - without fuel.

REGISTRATION:

EXAMPLE:

ITEM	ITEM WEIGHT	SCALE DIVISION AND MOTION DIRECTION
EMPTY C.G.	*28,8*	% MAC
AIRCRAFT EMPTY	*387 kg*	
PILOT	*85 kg*	5 kg ▷
PASSENGER	*65 kg*	5 kg ▷
BAGGAGE COMPARTMENT	*10 kg*	1 kg ▷
WING LOCKERS	*10 kg*	5 kg ▷
FUEL IN TANKS	*43 kg*	5 kg ◁
TAKEOFF WEIGHT	*600 kg*	
ZERO FUEL WEIGHT	*557 kg*	

NOTE:
CONVERSION OF THE FUEL VOLUME TO WEIGHT UNIT:
1 LITER = 0.72 kg

DATE:

PILOT:

SIGNATURE:

F-C-02AM

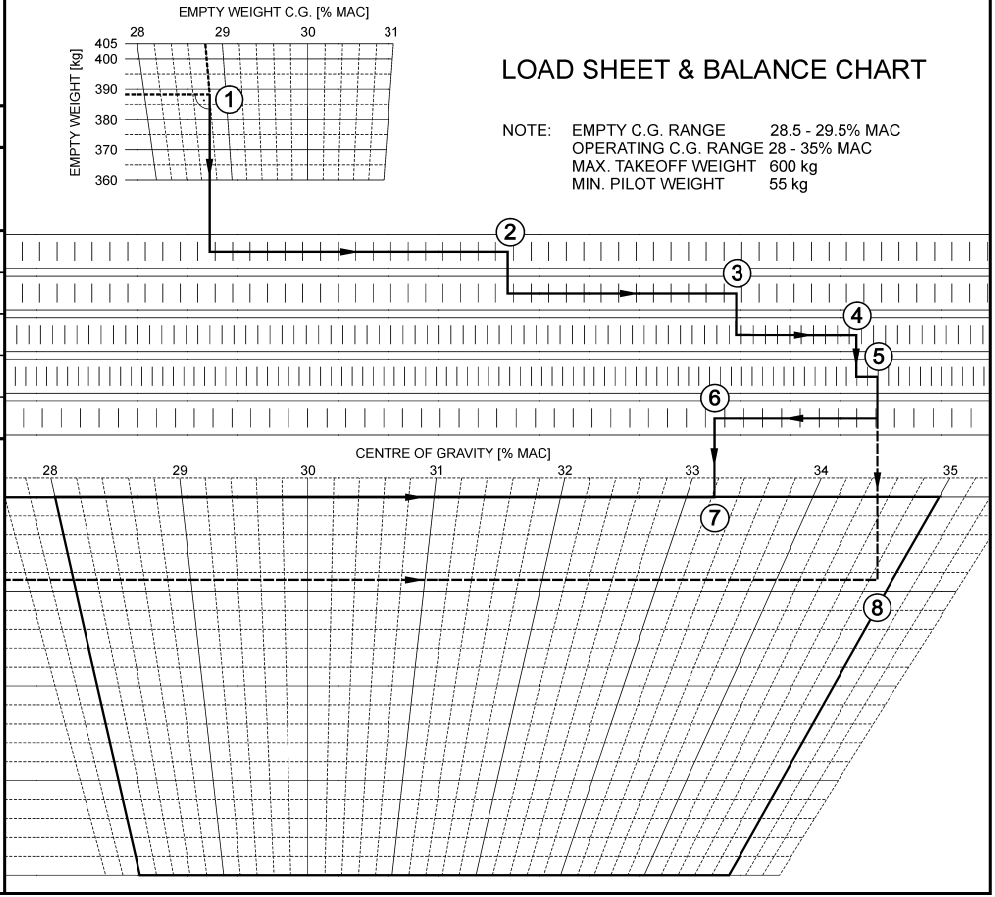

Blank form of Load sheet & Balance chart

REGISTRATION:

	ITEM WEIGHT	SCALE DIVISION AND MOTION DIRECTION
EMPTY C.G.		% MAC
ITEM		
AIRCRAFT EMPTY		
PILOT		5 kg ▷
PASSENGER		5 kg ▷
BAGGAGE COMPARTMENT		1 kg ▷
WING LOCKERS		5 kg ▷
FUEL IN TANKS		5 kg ◁
TAKEOFF WEIGHT		
ZERO FUEL WEIGHT		

NOTE:
CONVERSION OF THE FUEL VOLUME TO WEIGHT UNIT:
1 LITER = 0.72 kg

DATE:

PILOT:

SIGNATURE:

F-C-02AM

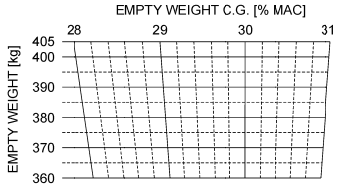

LOAD SHEET & BALANCE CHART

NOTE: EMPTY C.G. RANGE 28.5 - 29.5% MAC
OPERATING C.G. RANGE 28 - 35% MAC
MAX. TAKEOFF WEIGHT 600 kg
MIN. PILOT WEIGHT 55 kg

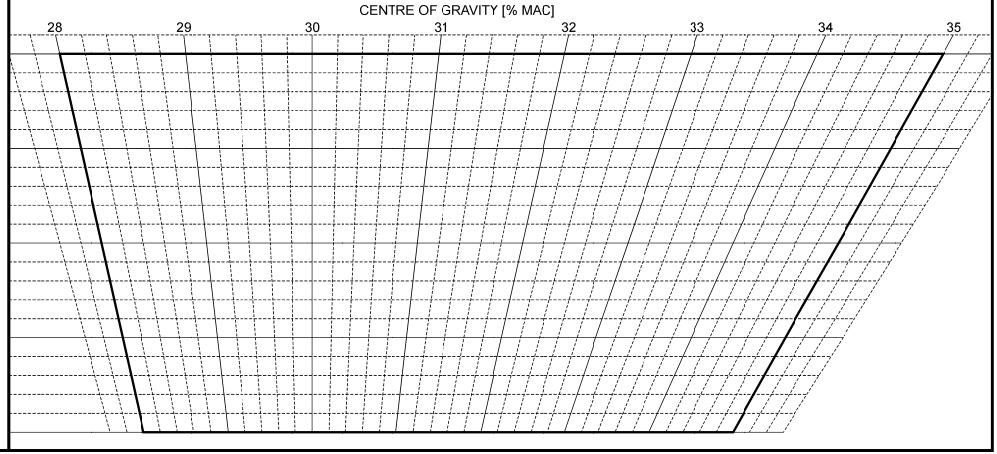

6.10 Installed equipment list

NOTE

Actual Installed equipment list is shown in Section 9, Supplement No. 02.

Intentionally left blank

SECTION 7

TABLE OF CONTENTS

7. DESCRIPTION OF AIRPLANE AND SYSTEMS

7.1	General	7-2
7.2	Airframe	7-2
7.3	Flight controls	7-2
7.4	Instrument panel	7-3
7.5	Engine	7-3
7.6	Propeller	7-4
7.7	Landing gear	7-5
7.8	Baggage compartment	7-5
7.9	Seats and safety harnesses	7-5
7.10	Canopy	7-6
7.11	Fuel system	7-6
7.12	Electrical system	7-7
7.13	Flight instruments and Avionics	7-7
7.14	Pitot-static system	7-7

7. DESCRIPTION OF AIRPLANE AND SYSTEMS

7.1 General

This section provides description and operation of the aircraft and its systems.

PS-28 Cruiser aircraft is a single-engine, all metal, low-wing monoplane of semi-monocoque structure with two side-by-side seats. The airplane is equipped with a fixed tricycle undercarriage with castering nose wheel.

Some parts of airplane are made from fiberglass laminate.

The cockpit is fitted by flight and engine analog instruments.

7.2 Airframe

All-metal construction, stressed skin, single curvature metal skins riveted to stiffeners. Construction is of 6061-T6 aluminum sheet metal riveted to aluminum angles with Avex rivets. This high strength aluminum alloy construction provides long life and low maintenance costs thanks to its durability and corrosion resistance characteristics.

The wing has a high lift airfoil equipped with flaps.

7.3 Flight controls

The aircraft is equipped with a dual stick control, the adjustable rudder pedals with pedal hydraulic brakes for easy ground control of the castering nose wheel.

Lateral and longitudinal control movement is transferred by mechanical system of pull rods and levers.

Rudder control is controlled by pedals of foot control. The rudder is interconnected with foot control pedals by cable system.

The rudder pedals setting levers are located in the left and right corner under and slightly behind the instrument panel.

Wing flaps are electrically actuated by the rocker switch located on the middle panel. The wing flaps position indicator is located on the middle panel next to the rocker switch.

The elevator and aileron trims are electrically actuated by buttons on the control stick. Elevator and aileron trim position indicators are located on the middle panel. Aileron trim tab position can be checked visually from cockpit by view to the right.

7.4 Instrument panel

NOTE

Actual Instrument panel layout and Description of instrumentation and controls in the cockpit are shown in Section 9, Supplement No. 2.

7.5 Engine

ROTAX 912 S2 / ULS2 engine with maximum power *73.5 kW* is installed in this aircraft. Rotax 912 S2 / ULS2 is a 4-stroke, 4-cylinder, horizontally opposed, spark ignition engine with one central camshaft-push-rod-OHV. Liquid cooled cylinder heads and ram air cooled cylinders.

Dry sump forced lubrication. Dual contactless capacitor discharge ignition. The engine is fitted with an electric starter, AC generator and mechanical fuel pump. Prop drive via reduction gear with integrated shock absorber.

For information about engine performance, speeds and limits see:

- *Section 2, chapter 2.12 "Engine operating speeds and limits" in this POH*
- *Rotax "Operator's manual" for engine type 912 series*

Engine controls

Throttle and Choke

Engine power is controlled by means of the THROTTLE lever and the CHOKE lever which are positioned in the middle channel between the seats side by side. Both levers are mechanically connected *(by cable)* to the flap on the carburetors. Springs are added to the throttle push rods to ensure that the engine will go to full power if the linkages fail.

Carburetor preheating

The heated air is streaming from a heat exchanger to the carburetor through the airbox. The control lever is installed on the middle panel.

Ignition switch

Ignition switch must be on **BOTH** position to operate the engine. For safety remove the key when engine is not running.

NOTE

Ignition system is independent of the power source and will operate even with Master switches and/or breakers OFF.

Engine instruments

The following analog engine instruments are located on the right side of instrument panel:

- engine speed
- oil pressure and temperature
- coolant temperature
- fuel pressure

For information about engine instruments range and markings see:

- S*ection 2, chapter 2.13 "Engine instruments markings".*

7.6 Propeller

Standard ***WOODCOMP KLASSIC 170/3/R*** three composite blades ground adjustable propeller is installed. The propeller diameter is *1,712 mm*.

NOTE

For technical data refer to documentation supplied by the propeller manufacturer.

7.7 Landing gear

Aircraft is equipped with tricycle landing gear.

Main landing gear uses two fiberglass spring elements. Each main gear wheel is equipped with an independent, hydraulically operated, disc type brakes. Nose wheel is free castering. Steering is accomplished by differential application of individual main gear brakes.

7.8 Baggage compartment

The rear baggage compartment is located behind seats. It may accommodate up to *18 kg*.

Baggage may also be loaded into the baggage compartment inside each wing up to *10 kg*, in each wing locker.

Make sure that baggage does not exceed maximum allowable weight, and that the aircraft C.G. is within limits with loaded baggage.

NOTE

The baggage compartments in wing lockers are not waterproof.

CAUTION

All baggage must be properly secured.

7.9 Seats and safety harnesses

Side-by-side seating. Seat cushions are removable for easy cleaning and drying. Four point safety belts provided to each seat. Additional seat upholstery to raise the small pilot or move him forward is optional.

NOTE

Prior to each flight, ensure that the seat belts are firmly secured to the airframe and that the belts are not damaged. Adjust the buckle to a central position on the body.

7.10 Canopy

Access to the cabin is from both sides. Make sure that the canopy is latched and mechanism is securely locked into position on both sides before operating the aircraft and manually check the canopy is locked by pushing the canopy upward. The canopy unlocked indicates **CANOPY OPENED** red LED flashing placed on upper left part of instrument panel.

7.11 Fuel system

Each tank is equipped with a vent outlet, finger screen filter and float sensor. Drain valve located in the lowest point of the each tank and on the bottom edge of the bulkhead, on the gascollator. Fuel selector valve is on the central console in the cockpit. The electric fuel pump is located on bulkhead and it is used for fuel line filling before engine starting. *Fuel return hose goes from the fuel pump into the left tank.*

CAUTION

During operation, fuel valve shall be in **LEFT** *or* **RIGHT** *tank position (position on green mark).*

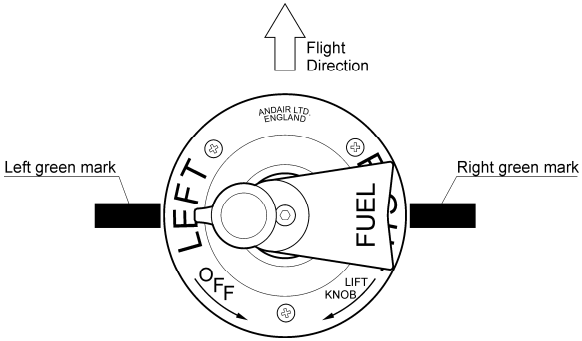

NOTE

Fuel is not closed when the fuel valve is in upper half between **LEFT** *and* **RIGHT** *tank positions.*

If left tank is full, start engine with the fuel selector set to **LEFT***. If you would start the engine with the fuel selector set to* **RIGHT** *and the left tank is full, than fuel bleed from the left tank vent may occur because a fuel return hose is led only into the left tank and returning fuel will overfill the left tank.*

CAUTION

Do not overfill the tanks to avoid fuel overflow through venting tubes.

7.12 Electrical system

Generator

The AC generator *(250 W AC)* is integrated in the engine and it is connected to the electric bus through the external rectifier regulator *(12 V 20 A DC)*.

Battery

The *12 V* battery is mounted on the front side of forward bulkhead.

Master battery switch

MASTER BAT switch connects the *12 V* battery to the electrical system.

Master generator switch

MASTER GEN switch connects the alternator to the electrical system.

Circuit breakers and switches

NOTE

Circuit breakers and switches description is shown in Section 9, Supplement No. 02.

7.13 Instruments and Avionics

NOTE

Instruments and avionics description is shown in Section 9, Supplement No. 02.

NOTE

For instruments and avionics operating instructions refer to the documentation supplied with the instruments and avionics.

7.14 Pitot-static system

Standard ***AVIATIK WA037383 pitot-static probe*** is located below the left wing. Pressure distribution to the instruments is through flexible plastic hoses. Keep the pitot head clean to ensure proper function of the system.

Intentionally left blank

SECTION 8

TABLE OF CONTENTS

8. HANDLING AND SERVICING

8.1	Introduction	8-2
8.2	Ground handling	8-2
8.3	Towing instructions	8-3
8.4	Tie-down instructions	8-3
8.5	Servicing operating fluids	8-4
8.6	Cleaning and care	8-6
8.7	Assembly and disassembly	8-6
8.8	Aircraft inspection periods	8-6
8.9	Aircraft alterations or repairs	8-7

8. HANDLING AND SERVICING

8.1 Introduction

This section contains factory-recommended procedures for proper ground handling and servicing of the airplane. It also identifies certain inspection and maintenance requirements, which must be followed if the airplane is to retain that new-plane performance and dependability.

8.2 Ground handling

8.2.1 Parking

It is advisable to park the airplane inside a hangar or alternatively inside any other suitable space *(garage)* with stable temperature, good ventilation, low humidity and dust-free environment.
It is necessary to moor the airplane when it is parked outside a hangar. Also when parking for a long time, cover the cockpit canopy, possibly the whole airplane by means of a suitable tarpaulin.

8.2.2 Jacking

Since the empty weight of this aircraft is relatively low, two people can lift the aircraft easily. First of all prepare two suitable supports to support the aircraft.
It is possible to lift the aircraft by handling the following parts:

- By pushing the fuselage rear section down in the place of a bulkhead the fuselage front section may be raised and then supported under the firewall.
- By holding the fuselage rear section under a bulkhead the fuselage rear may be raised and then supported under that bulkhead.
- To lift up a wing, push from underneath that wing ***only*** at the main spar area. Do not lift up a wing by handling the wing tip.

8.2.3 Road transport

The aircraft may be transported after loading on a suitable car trailer. It is necessary to dismantle the wings before road transport. The aircraft and dismantled wings should be attached securely to protect these parts against possible damage.

8.3 Towing instructions

To handle the airplane on ground use the *Tow Bar*, or if pushing the airplane by hand, push on the aft fuselage, placing your hands over an area of skin supported by a bulkhead.

CAUTION

Do not push or pull on the propeller or on the control surfaces when towing. You can damage the propeller and the control surfaces.

Avoid excessive pressure at the airplane airframe. Keep all safety precautions, especially in the propeller area.

Always use tow bar for direction control when pushing the airplane.

8.4 Tie-down instructions

The airplane should be moored when parked outside a hangar after the flight day. The mooring is necessary to protect the airplane against possible damage caused by wind and gusts.
For this reason the aircraft is equipped with mooring eyes located on the lower surfaces of the wings.

Tie-down procedures:

1. **FUEL** selector - **OFF**
2. **MASTER BAT** & **GEN** - OFF
3. Other switches - OFF
4. Ignition Switch - **OFF**
5. Control stick - fix using e.g. safety harness
6. Air vent - close
7. Canopy - close and lock
8. Moor the aircraft to the ground by means of a mooring rope passed through the mooring eyes located on the lower surfaces of the wings and below rear fuselage.

NOTE

In the case of long term parking, especially during winter, it is recommended to cover the cockpit canopy or possibly the whole aircraft by means of a suitable tarpaulin attached to the airframe.

8.5 Servicing operating fluids

See appropriate chapters in the ROTAX engine Maintenance and Operator's manuals and *PS-28 Cruiser* aircraft Maintenance manual for more instructions.

8.5.1 Approved fuel grades and specifications

Recommended fuel type:

(refer to the ROTAX Operator's manual section 2.4 Fuel,
Rotax Service Instruction SI-912-016)

MOGAS

European standards	- min. RON 95, EN 228 Super, EN 228 Super plus
US standard	- ASTM D4814
Canadian standards	- min. AKI 91, CAN/CGSB-3.5 Quality 3

CAUTION

Fuels that contain more than 5 % ethanol blend have not been tested and are not permitted for use.

AVGAS

US standard	- AVGAS 100 LL (ASTM D910)

AVGAS 100 LL places greater stress on the valve seats due to its high lead content and forms increased deposits in the combustion chamber and lead sediments in the oil system. Thus it should only be used in case of problems with vapor lock or when other types of gasoline are unavailable.

Fuel volume:

Wing fuel tanks volume ..... *2x 57 L*
Unusable fuel quantity ..... *2x 0.5 L*

8.5.2 Approved oil grades and specifications

Recommended oil type:

(refer to the Rotax Operator's manual section 2.5 Lubricants,
Rotax Service Instruction SI-912-016)
Motorcycle 4-stroke engine oil of registered brand with gear additives.
Use only oil with API "SG" classification or higher!
Use multi-grade oil. Use of mineral oil is not recommended.

Type of oil used by aircrafts manufacturer:

- see Section 9, Supplement No. 02

Oil volume:

Minimum ..... *3.3 L*
Maximum ..... *3.8 L*

8.5.3 Approved coolant grades and specifications

Recommended coolant type:

(refer to the Rotax Operator's manual section 2.2 Operating speeds and limits and section 2.3 Coolant, Rotax Installation manual - Cooling system, Rotax Service Instruction SI-912-016)

New cylinder head design

Only one type of coolant is permitted:

- Conventional coolant based on ethylene glycol (mixture with 50% of water)

NOTE

With the change to a new cylinder heads design (applicable for 912 ULS2 engines from S/N 6 781 410 inclusive and 912 S2 engines from S/N 4 924 544 inclusive, or on all engines with type designation followed by suffix-01, or on all engines which have been later equipped with the new cylinder heads design of P/N 413185 at cylinder head position 2/3), no longer the Cylinder Head Temperature is measured, but the Coolant Temperature.

CAUTION

Waterless coolant are not allowed to use for Rotax engines with new cylinder head design.

Type of coolant used by aircrafts manufacturer:

- see Section 9, Supplement No. 02

Coolant liquid volume:

It is approximately..... *2.9 L*

8.6 Cleaning and care

Use efficient cleaning detergents to clean the aircraft surface. Oil spots on the aircraft surface *(except the canopy!)* may be cleaned with petrol.
The canopy may only be cleaned by washing it with a sufficient quantity of lukewarm water and an adequate quantity of detergents. Use either a soft, clean cloth sponge or deerskin. Then use suitable polishers to clean the canopy.

CAUTION
*Never clean the canopy under "dry" conditions and **never** use petrol or chemical solvents!*

Upholstery and covers may be removed from the cockpit, brushed and eventually washed in lukewarm water with an adequate quantity of detergents. Dry the upholstery thoroughly before insertion into the cockpit.

CAUTION
In the case of long term parking, cover the canopy to protect the cockpit interior from direct sunshine.

8.7 Assembly and disassembly

Refer to the *PS-28 Cruiser* aircraft Maintenance manual and the aircraft Assembly photo manual.

8.8 Aircraft inspection periods

Periods of overall checks and contingent maintenance depends on the condition of the operation and on overall condition of the airplane.

Inspections and revisions should be carried out in the periods listed in:

- *PS-28 Cruiser aircraft Maintenance manual* for aircraft maintenance.
- *Rotax engine Maintenance manual* for engine maintenance.
- *Woodcomp KLASSIC propeller manual* for propeller maintenance.

NOTE
Aircraft maintenance should be made in accordance with AC 43.13-1B.

8.9 Aircraft alternations or repairs

It is recommended to contact the airplane manufacturer prior to any alternations to the aircraft to ensure that the airworthiness of the aircraft is not violated. Always use only the original spare parts produced by the airplane (engine, propeller) manufacturer.

If the aircraft weight is affected by any alternation, a new weighing is necessary, then record the new empty weight into the Weight and Balance record.

NOTE

Aircraft repairs should be made in accordance with AC 43.13-1B.

Intentionally left blank

SECTION 9

TABLE OF CONTENTS

9. SUPPLEMENTS

9.1 List of inserted supplements **9-2**
9.2 Inserted supplements **9-2**

9. SUPPLEMENTS

This section contains the appropriate supplements necessary to safely and efficiently operate the aircraft when equipped with various optional systems and equipment not provided with the standard airplane.

9.1 List of inserted supplements

Suppl. No.	Title of supplement	Inserted	Date	Rev. No.
02	Aircraft specification S/N: C0605	yes	2015-11-11	1
05	Stall Warning System Installation	yes	2012-09-25	-
06	Sensenich 3B0R5R68C Propeller Installation	yes	2013-07-25	-
09	Installation of Efficient Heating and Windshield Defogging System	yes	2013-03-12	-
11	12 V Socket Installation	yes	2013-07-04	-
13	Installation of Garmin GNC 255A NAV/COMM with CDI Garmin MD200-306	yes	2014-01-16	-
16	Installation of ELT KANNAD 406 AF-COMPACT	yes	2017-06-09	-

9.2 Inserted Supplements

Supplement No. 02

AIRCRAFT SPECIFICATION
Classical instruments equipment package

In this Supplement No. 02 – Weight & Balance & Equipment is shown for real S/N of the aircraft.

Aircraft Registration Number: **OM - CAD**

Aircraft Serial Number: **C0605**

This Supplement must be attached to the POH during airplane operation.

Information in this Supplement completes or replaces information in the basic POH for the below mentioned parts only. Limitations, procedures and information not mentioned in this Supplement and included in the basic POH stay valid.

This Supplement completes information necessary for the airplane operation with equipment installed on the airplane.

The structure of this supplement is EASA approved under the Restricted Type Certificate EASA.A.546, Approval date: 16. 04. 2012.

This document is prepared in accordance with the AP DOA Approval No. AP332.

RECORD OF REVISIONS

Rev. No.	Affected pages	Revision name	Approved	Date
1	All	Coolant temperature instrument color marking change	EASA AFM Approval 10055978	2015-12-11

2.13 Engine instruments markings

Rotax 912 S2 / ULS2 73.5 kW *(98.6 hp)*	**Minimum Limit**	**Caution Range**	**Normal Operating Range**		**Caution Range**	**Maximum Range**
	red line	**yellow arc**	**white arc ***	**green arc**	**yellow arc**	**red line**
Engine speed RPM	-	0-1,400	-	1,400-5,500	5,500-5,800	5,800
Oil Pressure	0.8 bar	0.8-2 bar	-	2-5 bar	5-7 bar	7 bar
Oil Temperature	50 °C	50-90 °C	-	90-110 °C	110-130 °C	130 °C
Coolant Temperature (CT) *	-	-	50-90 °C	90-120 °C	-	120 °C
Fuel Pressure	0.15 bar	-	-	0.15-0.4 bar	-	0.4 bar
Manifold Pressure	-	-	-	10-35 inHg	-	-

***** CT normal operating range is from 50 to 120 °C. It is represented by white and green scale on the installed CT indicator.

6. WEIGHT AND BALANCE

6.5 C.G. range and determination

6.5.2 Aircraft C.G. determination

WEIGHT & BALANCE RECORD

Empty weight C.G. determination table

	ITEM	WEIGHT kg	ARM mm	MOMENT kg mm
AIRCRAFT EMPTY C.G.	RIGHT MAIN WHEEL	W_R = 147.8	L_R = 798	117,944.4
	LEFT MAIN WHEEL	W_L = 147.9	L_L = 784	115,953.6
	NOSE WHEEL	W_N = 92.3	L_N = - 712 negative arm	- 65,717.6
	TOTAL	**Empty weight:** W_{TE} = 388.0	**C.G.** = 433.5 mm 28.9 % MAC	**Aircraft moment:** M_{TE} = 168,180.4

NOTE:

Empty weight is including oil, coolant, hydraulic fluid and unusable fuel.

Empty weight C.G. range : *427.5 to 442.5 mm / 28.5 to 29.5 % of MAC*

Operating C.G. range : *420 to 525 mm / 28 to 35 % of MAC*

MAC : *1,500 mm*

MOMENT (kg mm) = WEIGHT (kg) x ARM (mm)

$$\text{AIRCRAFT EMPTY WEIGHT C.G.} = \frac{M_{TE}}{W_{TE}} \text{ (mm)} \times \frac{100}{MAC} \text{ (\%) of MAC}$$

Registration:	OM - CAD
Serial No.:	C0605
Date:	2017-07-14
By:	Otakar Hrabinec

6.9 Installed equipment list

of PS-28 Cruiser aircraft

- *Rotax 912 ULS2 with airbox and thermostats*
- *Sensenich 3B0R5R68C propeller*
- *Airspeed indicator, Altimeter*
- *Vertical speed indicator*
- *Vertical card magnetic compass*
- *Electric attitude indicator*
- *Electric turn coordinator*
- *Electric directional gyro*
- *Course deviation indicator*
- *Garmin GNC 255A transceiver*
- *PS Engineering PM3000 intercom*
- *Garmin GTX328 transponder*
- *Sandia SAE5-35 altitude encoder*
- *Kannad 406 AF Compact ELT*
- *Antennas*
- *Garmin Aera500 GPS*
- *Engine RPM indicator*
- *Oil pressure and temperature gauges*
- *CT indicator, Voltmeter*
- *Fuel pressure and quantity gauges*
- *Engine hours counter*
- *G -205 trim control and PTT on the control sticks*
- *Trims and flaps electrically actuated*
- *AVE-WPST wing tips LED strobe/nav/pos lights*
- *Kuntzleman LED Landing light in cowl*
- *Instruments lighting*
- *Cockpit light*
- *Adjustable pedals*
- *Dual hydraulic brakes*
- *Parking brake*
- *Wheel fairings tricycle*
- *Efficient cabin heating*
- *Carburetor preheating*
- *Leather upholstery*
- *Paint*
- *Sunshade*
- *Arm supports*
- *Stall warning system*

7. DESCRIPTION OF AIRPLANE AND SYSTEMS

7.4 Instrument panel

Instrument panel layout of *PS-28 Cruiser* aircraft

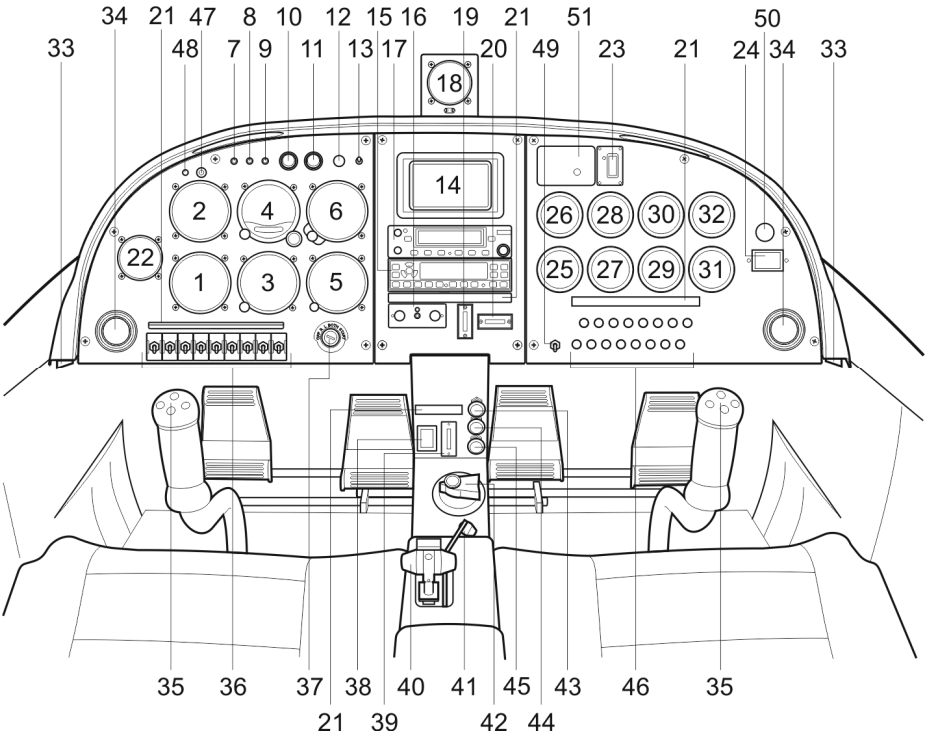

Description of instrumentation and controls in the cockpit

1	*Electric turn coordinator*	*27*	*Fuel quantity indicator – LH tank*
2	*Airspeed indicator*	*28*	*Oil pressure indicator*
3	*Electric directional gyro*	*29*	*Fuel quantity indicator – RH tank*
4	*Electric attitude indicator*	*30*	*Oil temperature indicator*
5	*Course deviation indicator*	*31*	*Voltmeter*
6	*Altimeter*	*32*	*CT indicator*
7	*Cabin unlocked warning light*	*33*	*Pedal adjustment lever*
8	*Fuel pump operation lamp*	*34*	*Vent-air outlet*
9	*Generator failure warning light*	*35*	*PTT / elevator trim / aileron trim buttons*
10	*Cockpit light switch*	*36*	*Switches* *
11	*Instruments lighting switch*	*37*	*Ignition switch*
12	*Instruments lighting dimmer*	*38*	*Flaps control switch*
13	*Day / night instruments lighting switch*	*39*	*Flaps position indicator*
14	*GPS*	*40*	*Throttle*
15	*Transponder*	*41*	*Choke*
16	*PS Engineering Intercom*	*42*	*Fuel selector valve*
17	*VHF Transceiver*	*43*	*Cabin heating*
18	*Magnetic compass*	*44*	*Carburetors preheating*
19	*Elevator trim indicator*	*45*	*Parking brake*
20	*Aileron trim indicator*	*46*	*Circuit breakers* *
21	*Lighting cover*	*47*	*Stall warning light*
22	*Vertical speed indicator*	*48*	*Stall warning test button*
23	*ELT control unit*	*49*	*Blowers switch* *
24	*Engine hours meter*	*50*	*12 V socket*
25	*Fuel pressure indicator*	*51*	*CO detector*
26	*Engine speed indicator*		

***** Switches and circuit breakers detailed description is in this Supplement, page 8.

7.12 Electrical system

Circuit breakers and switches

LEFT PART OF INSTRUMENT PANEL	**MASTER BAT**	*master battery* *- transceiver, intercom*	switch	-
	MASTER GEN	*master generator*	switch	-
	ENG INSTR	*engine instruments*	switch	-
	FLT INSTR	*- attitude indicator* *- directional gyro* *- turn indicator*	switch	-
	AVIONICS	*- transponder, GPS*	switch	-
	FUEL P	*fuel pump*	switch	-
	NAV L	*navigation/position lights*	switch	-
	STROBE	*strobe lights*	switch	-
	LDG L	*landing light*	switch	-
	COCKPIT L	*cockpit light*	switch	-
	INSTR L	*instruments lighting*	switch	-
	DIM	*instruments lighting intensity*	dimmer	-
	NIGHT **POS IND** **DAY**	*-trim indicators intensity* *-flaps pos. indicator intensity*	switch	-
RIGHT PART OF INSTRUMENT PANEL	**BLOWERS**		circuit breaker	3A
	COMM	*transceiver*	circuit breaker	10A
	IC	*intercom*	circuit breaker	1A
	ENG INSTR	*engine instruments*	circuit breaker	1A
	NAV	*transceiver - navigation device*	circuit breaker	4A
	GPS		circuit breaker	3A
	XPDR	*transponder*	circuit breaker	5A
	ATT	*attitude indicator*	circuit breaker	2A
	DG	*directional gyro*	circuit breaker	4A
	TB	*turn indicator*	circuit breaker	1A
	FUEL P	*fuel pump*	circuit breaker	3A
	FLAPS		circuit breaker	3A
	TRIM	*- aileron trim* *- elevator trim*	circuit breaker	2A
	STROBE	*strobe lights*	circuit breaker	5A
	NAV L	*navigation lights*	circuit breaker	5A
	LDG L	*landing light*	circuit breaker	3A
	INT L	*- instruments lighting* *- cockpit light*	circuit breaker	2A
	12V	*12 V socket*	circuit breaker	2A
	STALL WARNING	*stall warning system*	circuit breaker	1A

7.13 Instruments and Avionics

The aircraft is equipped with instruments as follows:

Airspeed indicator

Altimeter

Vertical speed indicator

Vertical card magnetic compass

Electric attitude indicator

Electric directional gyro

Electric turn coordinator

Course deviation indicator

Engine RPM indicator

Oil pressure and temperature gauges

Fuel pressure and quantity gauges

CT indicator

Voltmeter

Engine hours counter

The aircraft is equipped with avionics as follows:

Transceiver - Garmin GNC 255A

Intercom - PS Engineering PM3000

Transponder - Garmin GTX328

GPS - Garmin Aera500

ELT - Kannad 406 AF Compact

NOTE

For instruments and avionics operating instructions refer to the documentation supplied with the instruments and avionics.

8. HANDLING AND SERVICING

8.5 Servicing operating fluids

8.5.2 Approved oil grades and specifications

Type of oil used by aircraft manufacturer:

AeroShell Oil Sport Plus 4

SAE: 10W-40, API: SL

8.5.3 Approved coolant grades and specifications

Type of coolant used by aircraft manufacturer:

Specification: ASTM D 3306, VW TL 774C, G11

Mixing ratio coolant / water: *50/50 %*

Max. coolant temperature: *120 °C*

Supplement No. 05

Stall Warning System Installation

Aircraft Registration Number: **OM - CAD**

Aircraft Serial Number: **C0605**

This Supplement must be attached to the POH when the Stall Warning System is installed in accordance with the manufacturer's approved documentation.

Information in this Supplement completes or replaces information in the basic POH for the below mentioned parts only. Limitations, procedures and information not mentioned in this Supplement and included in the basic POH stay valid.

This Supplement completes information necessary for the airplane operation with equipment installed on the airplane.

This supplement is EASA approved under Major Change Approval No. 10043557.
Approval Date: 06 February 2013

This document is prepared in accordance with the AP DOA Approval No. AP332.

RECORD OF REVISIONS

Rev. No.	Affected pages	Revision name	Approved	Date

Chapter 1 - GENERAL INFORMATION

No change.

Chapter 2 - LIMITATIONS

2.15 Limitation placards and markings

Operating limitation on instrument panel



2.16 Miscellaneous placards and markings



Chapter 3 - EMERGENCY PROCEDURES

3.18 Inadvertent icing encounter

6. In case of icing on the leading edge of wing, the stall speed will increase. Stall warning probe is not heated and system will be probably out of function.

3.29 Stall warning system failure

If any doubt about the correct operation of the stall warning system:

1. **STALL WARNING** **TEST** button - momentary press
2. **STALL WARNING** red light / audiable alarm - check for annunciation

If warning light / audiable alarm not anunciated:

3. Land as soon as practicable

WARNING
In case of the stall warning system failure, pay increased attention to approach and to other low speed maneuvers.

Chapter 4 - NORMAL PROCEDURES

4.1 Preflight check

Inspection Check List

①	• **STALL WARNING TEST** button	- momentary press – **STALL WARNING** red light / audiable alarm must be annunciated
	• All switches	- OFF
	• **MASTER BAT**	- OFF
③	• Stall warning probe	- condition, attachment, function - *Left wing only*

Chapter 5 - PERFORMANCE

No change.

Chapter 6 - WEIGHT AND BALANCE

No change.

Chapter 7 - DESCRIPTION OF AIRPLANE AND SYSTEMS

7.14 Pitot-static system

Stall warning system

The airplane is equipped with a stall warning system. The lift detector of the stall warning system is located on the left wing leading edge.

Should the critical angle of attack be approached (close to stall speed), the lift detector is actuated by the differences in pressures. Actuation of the lift detector triggers the stall warning system's electrical circuit.

When the stall warning system is triggered, an audio alert is activated and the red **STALL WARNING** light will illuminate on the left instrument panel.

The proper function of the system can be checked by pressing **STALL WARNING TEST** button located on the left instrument panel.

Chapter 8 - HANDLING AND SERVICING

No change.

Intentionally left blank

Supplement No. 06

Sensenich 3B0R5R68C Propeller Installation

Aircraft Registration Number: **OM - CAD**

Aircraft Serial Number: **C0605**

This Supplement must be attached to the POH when the Sensenich 3B0R5R68C propeller is installed in accordance with the manufacturer's approved documentation.

Information in this Supplement completes or replaces information in the basic POH for the below mentioned parts only. Limitations, procedures and information not mentioned in this Supplement and included in the basic POH stay valid.

This Supplement completes information necessary for the airplane operation with equipment installed on the airplane.

This supplement is EASA approved under EASA AFM Approval No. 10052205
Approval Date: 10 February 2015

This document is prepared in accordance with the AP DOA Approval No. AP332.

RECORD OF REVISIONS

Rev. No.	Affected pages	Revision name	Approved	Date

Chapter 1 - GENERAL INFORMATION

1.1 Airplane specification

Propeller:

Manufacturer	SENSENICH
Model number	3B0R5R68C
Number of blades	3
Diameter	*1,727 mm*
Pitch setting	*18.3 ± 0.5°*
Type	three composite blades, ground adjustable

1.2 Summary of performances

Speeds:

Maximum at sea level	*117 KIAS*
Cruise, 75% power at 3,000 ft	*92 KIAS*

Range and endurance:

Range	486 *NM*	*(900 km)*
Endurance	*5:03 h:mm*	

Conditions:

Usable fuel	*113 L*
75% power of engine	*5,000 RPM*
Altitude	*3,000 ft*
Reserve	*30 minutes*

Rate of climb:

At sea level	*833 fpm*
Best angle of climb speed (v_x)	*55 KIAS*
Best rate of climb speed (v_y)	*62 KIAS*

Chapter 2 - LIMITATIONS

No change.

Chapter 3 - EMERGENCY PROCEDURES

No change.

Chapter 4 - NORMAL PROCEDURES

4.4 Normal Takeoff

4.4.1 Engine run-up

CAUTION

The engine run-up should be performed with the aircraft heading upwind and not on a loose terrain (the propeller may suck grit which can damage the leading edges of blades).

1.	Brakes	- fully applied
2.	Throttle	- **MAX**
3.	Engine speed	- check *(4,950 ±100 rpm – wind calm)*
4.	Engine gauges	- within limits
5.	Throttle	- **IDLE**
6.	Engine acceleration	- check

CAUTION

To prevent impact load, wait for around 3 sec. after throttling back to partial load to reach constant speed before re-acceleration.

7.	Ignition check	- set engine speed to *4,000 rpm* - switch ignition gradually to **L – BOTH – R – BOTH** *(Max. engine speed drop with only one ignition circuit must not exceed **300 rpm**. Max engine speed drop difference between circuits **L** and **R** should be **115 rpm**.)*
8.	**CARBURETOR AIR**	- **PULL HOT** - check carburetor preheating function *(Engine speed drop max.100 rpm)* - push **OFF**
9.	Throttle	- **IDLE**

NOTE

For checking the two ignition circuits, only one circuit may be switched OFF and ON at a time.

4.4.3 Takeoff

1. THROTTLE	- **MAX**
2. Engine speed	- check *(4,950 ±100 rpm – wind calm)*
3. Engine gauges	- within limits
4. Elevator control	- neutral position - at *30 - 34 KIAS* pull slightly to lift the nose wheel
5. Airplane unstick	- at *40 - 44 KIAS*
6. Climb	- after reaching airspeed *62 KIAS*
7. Brakes	- apply
8. Flaps	- retract *(0°)* at safe altitude *(max. airspeed for flaps using is 75 KIAS)*
9. Trims	- as necessary

4.15 Noise characteristics

The noise level in accordance with requirements of the CS-36, Am.2 (ICAO Annex 16, Volume I, Chapter 10 - 10.4 b) has been established as *63.7 ± 0.9 dB(A).*

The noise level for aircraft equipped with the after muffler (Dwg. No. SE0490N) has been established as *62.6 ± 1.1 dB(A).*

Chapter 5 - PERFORMANCE

The performance shown in this section is valid for aircraft equipped with ***ROTAX 912 S2*** / ***ULS2*** engine with maximum power *73.5 kW* and ***SENSENICH 3B0R5R68C*** three composite blades ground adjustable propeller with pitch setting *18.3 ±0.5° (Pin No. 3)*.

5.1 Takeoff distances

Conditions: - Altitude: *0 ft* ISA
- Engine power: *max. takeoff*
- Flaps: *12°*

RUNWAY SURFACE	**Takeoff run distance**		**Takeoff distance over *50 ft (15 m)* obstacle**	
	ft	*m*	*ft*	*m*
CONCRETE	*541*	*165*	*1,352*	*412*
GRASS	*794*	*242*	*1,565*	*477*

5.2 Landing distances

Conditions: - Altitude: *0 ft* ISA
- Engine power: *idle*
- Flaps: 30°
- Normal brakes operation

RUNWAY SURFACE	**Landing distance over *50 ft (15 m)* obstacle**		**Landing run distance (braked)**	
	ft	*m*	*ft*	*m*
CONCRETE	*1,463*	*446*	*459*	*140*
GRASS	*1,447*	*441*	*463*	*141*

5.3 Rate of climb

Conditions: Engine: *max. takeoff* Flaps: *0°*	**Best rate of climb speed Vy**	**Rate of climb Vz**
Altitude	*KIAS*	*fpm*
0 ft	*62*	*833*
1,000 ft	*62*	*780*
3,000 ft	*62*	*685*
5,000 ft	*62*	*620*
7,000 ft	*62*	*515*
9,000 ft	*62*	*410*

5.4 Cruise speeds

Altitude	Engine speed	Airspeeds			MAP	Fuel consumption
ft	*rpm*	*KIAS*	*KCAS*	*KTAS*	*in Hg*	*L/h*
1,000	*4,200*	*75*	*75*	*76*	*22.8*	*14.8*
	4,500	*83*	*82*	*84*	*23.8*	*17.1*
	4,800	*91*	*89*	*92*	*24.8*	*19.4*
	5,000	*96*	*94*	*97*	*25.4*	*21.0*
	5,300	*105*	*101*	*104*	*26.3*	*23.3*
	5,500	*109*	*105*	*108*	*26.9*	*24.8*
	5,800	*115*	*111*	*114*	*28.0*	*27.0*
3,000	*4,200*	*70*	*71*	*74*	*21.8*	*14.0*
	4,500	*79*	*78*	*83*	*22.6*	*16.4*
	4,800	*87*	*85*	*91*	*23.4*	*18.7*
	5,000	*92*	*90*	*96*	*24.0*	*20.3*
	5,300	*100*	*97*	*103*	*24.8*	*22.6*
	5,500	*105*	*101*	*107*	*25.3*	*24.2*
	5,800	*111*	*107*	*113*	*26.2*	*26.6*
5,000	*4,200*	*67*	*68*	*73*	*20.7*	*13.3*
	4,500	*75*	*75*	*82*	*21.5*	*15.6*
	4,800	*83*	*82*	*90*	*22.2*	*18.0*
	5,000	*89*	*87*	*95*	*22.7*	*19.6*
	5,300	*97*	*94*	*102*	*23.4*	*22.0*
	5,500	*103*	*98*	*106*	*23.9*	*23.6*
	5,800	*108*	*104*	*112*	*24.6*	*26.0*
7,000	*4,200*	*62*	*64*	*72*	*19.7*	*12.8*
	4,500	*71*	*72*	*81*	*20.3*	*15.2*
	4,800	*80*	*79*	*89*	*20.9*	*17.6*
	5,000	*86*	*84*	*94*	*21.3*	*19.2*
	5,300	*94*	*91*	*101*	*21.8*	*21.6*
	5,500	*99*	*96*	*105*	*22.2*	*23.2*
	5,700	*103*	*100*	*109*	*22.6*	*24.8*
9,000	*4,200*	*59*	*61*	*71*	*18.6*	*12.0*
	4,500	*68*	*69*	*80*	*19.1*	*14.5*
	4,800	*77*	*76*	*88*	*19.5*	*17.0*
	5,000	*83*	*81*	*93*	*19.8*	*18.6*
	5,300	*91*	*88*	*100*	*20.3*	*21.1*
	5,500	*96*	*93*	*104*	*20.6*	*22.6*
	5,600	*98*	*95*	*106*	*20.8*	*23.5*

5.5 RPM setting and fuel consumption

Altitude	*ft*	***1,000***					
Engine speed	*rpm*	***4,200***	***4,500***	***4,800***	***5,000***	***5,300***	***5,500***
Fuel consumption	*L/h*	*14.8*	*17.1*	*19.4*	*21.0*	*23.3*	*24.8*
Airspeeds	*KIAS*	*75*	*83*	*91*	*96*	*104*	*109*
	KCAS	*75*	*82*	*89*	*94*	*101*	*105*
	KTAS	*76*	*84*	*92*	*97*	*104*	*108*
Endurance and Range at 113 liters							
Endurance	*hh:mm*	*7:38*	*6:36*	*5:49*	*5:22*	*4:50*	*4:33*
Range	*NM*	*580*	*555*	*536*	*522*	*504*	*492*
	km	*1075*	*1028*	*992*	*967*	*934*	*911*
Endurance and Range at 90 liters							
Endurance	*hh:mm*	*6:04*	*5:15*	*4:38*	*4:17*	*3:51*	*3:37*
Range	*NM*	*462*	*442*	*427*	*416*	*402*	*392*
	km	*856*	*819*	*790*	*770*	*744*	*726*
Endurance and Range at 60 liters							
Endurance	*hh:mm*	*4:03*	*3:30*	*3:05*	*2:51*	*2:34*	*2:25*
Range	*NM*	*308*	*295*	*285*	*277*	*268*	*261*
	km	*571*	*546*	*527*	*513*	*496*	*484*
Endurance and Range at 30 liters							
Endurance	*hh:mm*	*2:01*	*1:45*	*1:32*	*1:25*	*1:17*	*1:12*
Range	*NM*	*154*	*147*	*142*	*139*	*134*	*131*
	km	*285*	*273*	*263*	*257*	*248*	*242*
Endurance and Range at 15 liters							
Endurance	*hh:mm*	*1:00*	*0:52*	*0:46*	*0:42*	*0:38*	*0:36*
Range	*NM*	*77*	*74*	*71*	*69*	*67*	*65*
	km	*143*	*136*	*132*	*128*	*124*	*121*

Altitude	*ft*	***3,000***					
Engine speed	*rpm*	***4,200***	***4,500***	***4,800***	***5,000***	***5,300***	***5,500***
Fuel consumption	*L/h*	*14.0*	*16.4*	*18.7*	*20.3*	*22.6*	*24.2*
Airspeeds	*KIAS*	*70*	*79*	*87*	*92*	*100*	*105*
	KCAS	*71*	*78*	*85*	*90*	*97*	*101*
	KTAS	*74*	*83*	*91*	*96*	*103*	*107*
Endurance and Range at 113 liters							
Endurance	*hh:mm*	*8:04*	*6:53*	*6:02*	*5:33*	*5:00*	*4:40*
Range	*NM*	*597*	*572*	*550*	*534*	*515*	*500*
	km	*1106*	*1059*	*1018*	*990*	*954*	*925*
Endurance and Range at 90 liters							
Endurance	*hh:mm*	*6:25*	*5:29*	*4:48*	*4:26*	*3:58*	*3:43*
Range	*NM*	*476*	*455*	*438*	*426*	*410*	*398*
	km	*881*	*844*	*811*	*788*	*760*	*737*
Endurance and Range at 60 liters							
Endurance	*hh:mm*	*4:17*	*3:39*	*3:12*	*2:57*	*2:39*	*2:28*
Range	*NM*	*317*	*304*	*292*	*284*	*273*	*265*
	km	*587*	*562*	*541*	*525*	*506*	*491*
Endurance and Range at 30 liters							
Endurance	*hh:mm*	*2:08*	*1:49*	*1:36*	*1:28*	*1:19*	*1:14*
Range	*NM*	*159*	*152*	*146*	*142*	*137*	*133*
	km	*294*	*281*	*270*	*263*	*253*	*246*
Endurance and Range at 15 liters							
Endurance	*hh:mm*	*1:04*	*0:54*	*0:48*	*0:44*	*0:39*	*0:37*
Range	*NM*	*79*	*76*	*73*	*71*	*68*	*66*
	km	*147*	*141*	*135*	*131*	*127*	*123*

Altitude	*ft*	***5,000***					
Engine speed	*rpm*	***4,200***	***4,500***	***4,800***	***5,000***	***5,300***	***5,500***
Fuel consumption	*L/h*	*13.3*	*15.6*	*18.0*	*19.6*	*22.0*	*23.6*
Airspeeds	*KIAS*	*67*	*75*	*83*	*89*	*97*	*102*
	KCAS	*68*	*75*	*82*	*87*	*94*	*98*
	KTAS	*73*	*82*	*90*	*95*	*102*	*106*
Endurance and Range at 113 liters							
Endurance	*hh:mm*	*8:29*	*7:14*	*6:16*	*5:45*	*5:08*	*4:47*
Range	*NM*	*620*	*594*	*565*	*548*	*524*	*508*
	km	*1149*	*1100*	*1046*	*1014*	*970*	*940*
Endurance and Range at 90 liters							
Endurance	*hh:mm*	*6:46*	*5:46*	*5:00*	*4:35*	*4:05*	*3:48*
Range	*NM*	*494*	*473*	*450*	*436*	*417*	*404*
	km	*915*	*876*	*833*	*808*	*773*	*749*
Endurance and Range at 60 liters							
Endurance	*hh:mm*	*4:30*	*3:50*	*3:20*	*3:03*	*2:43*	*2:32*
Range	*NM*	*329*	*315*	*300*	*291*	*278*	*269*
	km	*610*	*584*	*556*	*539*	*515*	*499*
Endurance and Range at 30 liters							
Endurance	*hh:mm*	*2:15*	*1:55*	*1:40*	*1:31*	*1:21*	*1:16*
Range	*NM*	*165*	*158*	*150*	*145*	*139*	*135*
	km	*305*	*292*	*278*	*269*	*258*	*250*
Endurance and Range at 15 liters							
Endurance	*hh:mm*	*1:07*	*0:57*	*0:50*	*0:45*	*0:40*	*0:38*
Range	*NM*	*82*	*79*	*75*	*73*	*70*	*67*
	km	*152*	*146*	*139*	*135*	*129*	*125*

Altitude	*ft*	***7,000***					
Engine speed	*rpm*	***4,200***	***4,500***	***4,800***	***5,000***	***5,300***	***5,500***
Fuel consumption	*L/h*	*12.8*	*15.2*	*17.6*	*19.2*	*21.6*	*23.2*
Airspeeds	*KIAS*	*62*	*71*	*80*	*86*	*94*	*99*
	KCAS	*64*	*72*	*79*	*84*	*91*	*96*
	KTAS	*72*	*81*	*89*	*94*	*101*	*105*
Endurance and Range at 113 liters							
Endurance	*hh:mm*	*8:49*	*7:26*	*6:25*	*5:53*	*5:13*	*4:52*
Range	*NM*	*636*	*602*	*571*	*553*	*528*	*511*
	km	*1177*	*1115*	*1058*	*1025*	*979*	*947*
Endurance and Range at 90 liters							
Endurance	*hh:mm*	*7:01*	*5:55*	*5:06*	*4:41*	*4:09*	*3:52*
Range	*NM*	*506*	*480*	*455*	*441*	*421*	*407*
	km	*938*	*888*	*843*	*816*	*779*	*754*
Endurance and Range at 60 liters							
Endurance	*hh:mm*	*4:41*	*3:56*	*3:24*	*3:07*	*2:46*	*2:35*
Range	*NM*	*338*	*320*	*303*	*294*	*281*	*272*
	km	*625*	*592*	*562*	*544*	*520*	*503*
Endurance and Range at 30 liters							
Endurance	*hh:mm*	*2:20*	*1:58*	*1:42*	*1:33*	*1:23*	*1:17*
Range	*NM*	*169*	*160*	*152*	*147*	*140*	*136*
	km	*313*	*296*	*281*	*272*	*260*	*251*
Endurance and Range at 15 liters							
Endurance	*hh:mm*	*1:10*	*0:59*	*0:51*	*0:46*	*0:41*	*0:38*
Range	*NM*	*84*	*80*	*76*	*73*	*70*	*68*
	km	*156*	*148*	*140*	*136*	*130*	*126*

Altitude	*ft*	***9,000***					
Engine speed	*rpm*	***4,200***	***4,500***	***4,800***	***5,000***	***5,300***	***5,500***
Fuel consumption	*L/h*	*12.0*	*14.5*	*17.0*	*18.6*	*21.1*	*22.6*
Airspeeds	*KIAS*	*59*	*68*	*77*	*83*	*91*	*96*
	KCAS	*61*	*69*	*76*	*81*	*88*	*93*
	KTAS	*71*	*80*	*88*	*93*	*100*	*104*
Endurance and Range at 113 liters							
Endurance	*hh:mm*	*9:25*	*7:47*	*6:38*	*6:04*	*5:21*	*5:00*
Range	*NM*	*669*	*623*	*585*	*565*	*536*	*520*
	km	*1238*	*1155*	*1083*	*1046*	*992*	*963*
Endurance and Range at 90 liters							
Endurance	*hh:mm*	*7:30*	*6:12*	*5:17*	*4:50*	*4:15*	*3:58*
Range	*NM*	*533*	*497*	*466*	*450*	*427*	*414*
	km	*986*	*920*	*863*	*833*	*790*	*767*
Endurance and Range at 60 liters							
Endurance	*hh:mm*	*5:00*	*4:08*	*3:31*	*3:13*	*2:50*	*2:39*
Range	*NM*	*355*	*331*	*311*	*300*	*284*	*276*
	km	*657*	*613*	*575*	*556*	*527*	*511*
Endurance and Range at 30 liters							
Endurance	*hh:mm*	*2:30*	*2:04*	*1:45*	*1:36*	*1:25*	*1:19*
Range	*NM*	*178*	*166*	*155*	*150*	*142*	*138*
	km	*329*	*307*	*288*	*278*	*263*	*256*
Endurance and Range at 15 liters							
Endurance	*hh:mm*	*1:15*	*1:02*	*0:52*	*0:48*	*0:42*	*0:39*
Range	*NM*	*89*	*83*	*78*	*75*	*71*	*69*
	km	*164*	*153*	*144*	*139*	*132*	*128*

Chapter 6 - WEIGHT AND BALANCE

No change.

Chapter 7 - DESCRIPTION OF AIRPLANE AND SYSTEMS

7.6 Propeller

SENSENICH 3B0R5R68C three composite blades ground adjustable propeller is installed. The propeller diameter is *1,727 mm*.

NOTE
For technical data refer to documentation supplied by the propeller manufacturer.

Chapter 8 - HANDLING AND SERVICING

8.8 Aircraft inspection periods

Periods of overall checks and contingent maintenance depends on the condition of the operation and on overall condition of the airplane.

Inspections and revisions should be carried out in the periods listed in:

- *PS-28 Cruiser aircraft Maintenance manual* for aircraft maintenance.
- *Rotax engine Maintenance manual* for engine maintenance.
- *Sensenich 3B0R5R68C propeller manual* for propeller maintenance.

Supplement No. 09

Installation of Efficient Heating and Windshield Defogging System

Aircraft Registration Number: **OM - CAD**

Aircraft Serial Number: **C0605**

This Supplement must be attached to the POH when the Efficient Heating and Windshield Defogging System are installed in accordance with the manufacturer's approved documentation.

Information in this Supplement completes or replaces information in the basic POH for the below mentioned parts only. Limitations, procedures and information not mentioned in this Supplement and included in the basic POH stay valid.

This Supplement completes information necessary for the airplane operation with equipment installed on the airplane.

This supplement is EASA approved under EASA Minor Change Approval No. 10045960.
Approval Date: 31 July 2013

This document is prepared in accordance with the AP DOA Approval No. AP332.

RECORD OF REVISIONS

Rev. No.	Affected pages	Revision name	Approved	Date

Chapter 1 - GENERAL INFORMATION

No change.

Chapter 2 - LIMITATIONS

No change.

Chapter 3 - EMERGENCY PROCEDURES

3.18 Inadvertent icing encounter

CAUTION
Aircraft is approved to operate in VMC condition only!

1. Leave icing area - turn back or change altitude to reach area with higher outside air temperature
2. **CARBURETOR AIR** - **PULL HOT**
3. **CABIN HEATER** - **PULL ON**
4. **BLOWERS** - ON
5. Increase RPM to minimize ice build-up on propeller blades.
6. Continue to move control surfaces to maintain their moveability.
7. In case of icing on the leading edge of wing, the stall speed will increase.
8. In case of icing on the pitot probe, erroneous indicating of the airspeed and altimeter.
9. If you fail to recover the engine power or normal flight conditions, land on the nearest airfield *(if possible)* or depending on the circumstances, perform a precautionary landing according to *3.10* or emergency landing according to *3.9.*

NOTE
The carburetor icing and air filter icing shows itself through a decrease engine power and an increase of engine temperatures.

NOTE
Use carburetor heating during lengthy descents and in areas of possible carburetor icing.

3.28 Burned out heat exchanger

If smell of exhaust gas appears in the cockpit or CO detector indicates Caution level (green) / Danger level (dark blue), immediately carry out:

1. **CABIN HEATER** - **PUSH OFF**
2. Vent-air outlets - open
3. Sliding ventilation windows - open
4. Landing - carry out as soon as practicable

Chapter 4 - NORMAL PROCEDURES

4.1 Preflight check

Inspection Check List

①	• CO detector	- condition, expiration date

Chapter 5 - PERFORMANCE

No change.

Chapter 6 - WEIGHT AND BALANCE

Upon removal or installation of the Efficient Heating and Windshield Defogging System the change of empty weight and corresponding center of gravity of the airplane must be recorded according to Chapter 6 of the POH.

Chapter 7 - DESCRIPTION OF AIRPLANE AND SYSTEMS

7.15 Efficient heating and windshield defogging system

The airplane is equipped with an adjustable ventilation and cockpit heating system. Cockpit heating is ensured by hot air from the heat exchanger, which is mounted on the exhaust muffler. Quantity of hot air is regulated by **CABIN HEATING** knob located on the central panel stall warning system.

Furthermore is installed defogging of the windshield by means of two electric blowers that supply the air from the cockpit compartment via two air channels on the windshield. The blowers are not connected to the supply air from the heat exchanger and switch on by means of the **BLOWERS** switch located on the right part of the instrument panel (see Fig. 1).

7.16 Carbon monoxide detector

The airplane is equipped with Quantum Eye carbon monoxide (CO) detector, if the efficient heating system is installed.

The Quantum Eye is a multi-level carbon monoxide detector. It provides a visual indication of carbon monoxide contamination. Each detector is packaged in a protective bag then when opened activates it. Once activated the minimum product lifetime is 18 months. The detector is installed on the instrument panel (see Fig. 1).

Condition color:	Normal	- Yellow
	Caution	- Green
	Danger	- Dark blue.
Sensor regeneration:		
	from caution	- 2 hours
	from danger	- 6 hours

CAUTION

Watch the date on the detector and when necessary replace it. Mark the date when install the new one.

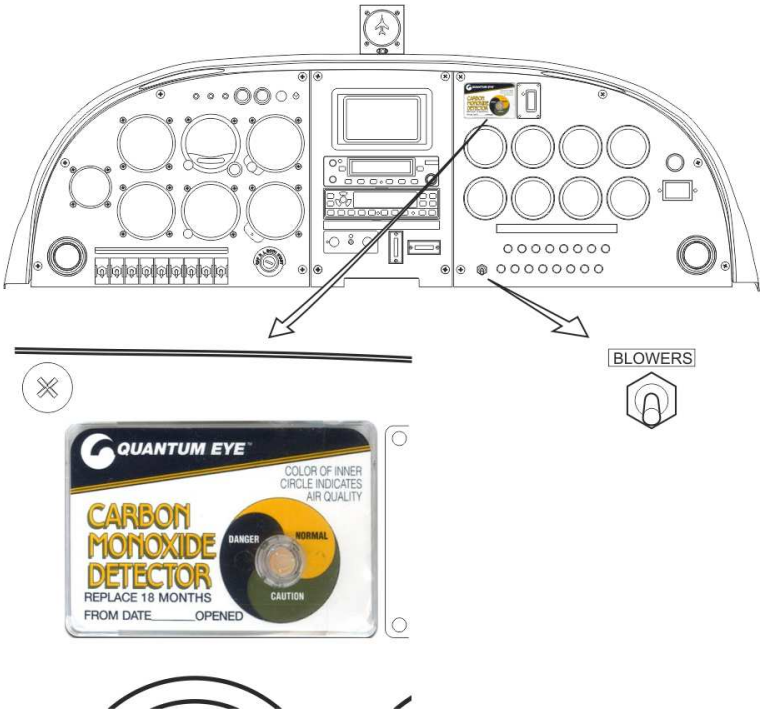

Fig. 1: Carbon monoxide detector / BLOWERS switch location

Chapter 8 - HANDLING AND SERVICING

No change.

Supplement No. 11

12 V Socket Installation

Aircraft Registration Number: **OM - CAD**

Aircraft Serial Number: **C0605**

This Supplement must be attached to the POH when the 12 V Socket is installed in accordance with the manufacturer's approved documentation.

Information in this Supplement completes or replaces information in the basic POH for the below mentioned parts only. Limitations, procedures and information not mentioned in this Supplement and included in the basic POH stay valid.

This Supplement completes information necessary for the airplane operation with equipment installed on the airplane.

This supplement is EASA approved under Minor Change Approval No. 10046176.
Approval Date: 23 August 2013

This document is prepared in accordance with the AP DOA Approval No. AP332.

RECORD OF REVISIONS

Rev. No.	Affected pages	Revision name	Approved	Date

Chapter 1 - GENERAL INFORMATION

No change.

Chapter 2 - LIMITATIONS

2.16 Miscellaneous placards and markings

12 V
MAX. 2 A

Chapter 3 - EMERGENCY PROCEDURES

No change.

Chapter 4 - NORMAL PROCEDURES

4.4 Normal Takeoff

4.4.2 Before takeoff

NOTE
Do not connect any device to the 12 V socket before takeoff. 12 V socket use in the cruise only.

4.8 Cruise

NOTE
As necessary connect any device to the 12 V socket.

4.11 Normal landing

4.11.1 Before landing

1. THROTTLE - as necessary
2. Airspeed - *60 KIAS*
3. **FLAPS** - landing position *(30°)*
4. Trims - as necessary
5. 12 V socket - disconnect any device

Chapter 5 - PERFORMANCE

No change.

Chapter 6 - WEIGHT AND BALANCE

No change.

Chapter 7 - DESCRIPTION OF AIRPLANE AND SYSTEMS

7.13 Instruments and Avionics

12 V Socket

The airplane is equipped with a 12 V socket on the right side of the instrument panel designed to supply portable appliances.

NOTE

12 V socket use in the cruise only.

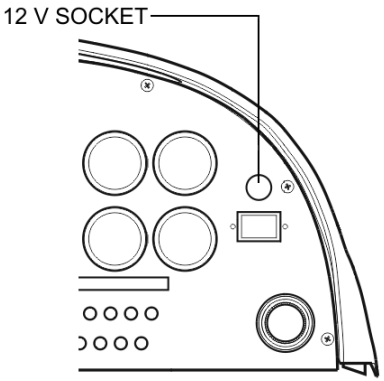

Fig. 1: 12V socket location

Chapter 8 - HANDLING AND SERVICING

No change.

Supplement No. 13

Installation of Garmin GNC 255A NAV/COMM with CDI Garmin MD200-306

Aircraft Registration Number: **OM - CAD**

Aircraft Serial Number: **C0605**

This Supplement must be attached to the POH when the Garmin GNC 255A NAV/COMM with CDI Garmin MD200-306 is installed in accordance with the manufacturer's approved documentation.

Information in this Supplement completes or replaces information in the basic POH for the below mentioned parts only. Limitations, procedures and information not mentioned in this Supplement and included in the basic POH stay valid.

This Supplement completes information necessary for the airplane operation with equipment installed on the airplane. This Supplement is a permanent part of this POH and must remain in this POH at all times when the GNC 255A NAV/COMM with CDI MD200-306 is installed.

This supplement is EASA approved under EASA Minor Change Approval No. 10048854.
Approval Date: 16 April 2014

This document is prepared in accordance with the AP DOA Approval No. AP332.

RECORD OF REVISIONS

Rev. No.	Affected pages	Revision name	Approved	Date

Chapter 1 - GENERAL INFORMATION

The airplane is equipped with Garmin GNC 255A NAV / COMM device. The COM section of the GNC 255A NAV / COMM operates in the aviation voice band, from 118.000 to 136.975 MHz, in 25 kHz steps (default). For European operations, a Com radio configuration of 8.33 kHz steps from 118.000 to 136.992 MHz is also available. The NAV section operates from 108 MHz to 117.95 MHz decoding both the VHF Omni Range and Localizer navigation signals. The built-in Glideslope receiver will automatically tune the corresponding glideslope paired frequencies (328 MHz to 335 MHz) when the localizer is tuned.

Garmin GNC 255A NAV / COMM has ETSO Authorization No. EASA.IM.21O.10043506, dated 04/02/2013.

Chapter 2 - LIMITATIONS

2.14 Other limitations

The Garmin GNC 255A/255B Pilot's Guide, P/N 190-01182-01 (revision A or later) and the Installation Manual and Operating Instructions MD-200-302/303/306/307 Series Course Deviation Indicator, Manual Number 8017972 (revision 3 or later) must be available to the flight.

Chapter 3 - EMERGENCY PROCEDURES

In case of emergency flight conditions, the standard emergency channel (121.50 MHz) is stored in the Com memory of the GNC 255A NAV / COMM.

1. Flip/Flop key - press and hold for approx. two second
2. Listen or send message

Chapter 4 - NORMAL PROCEDURES

4.16 Garmin GNC 255A NAV / COMM with MD200-306 CDI Operation

NOTE

Refer to the Garmin GNC 255A/255B Pilot's Guide, P/N 190-01182-01 (revision A or later) for complete operating procedures.

Refer to the Installation Manual and Operating Instructions MD-200-302/303/306/307 Series Course Deviation Indicator, Manual Number 8017972 (revision 3 or later) for complete operating procedures.

4.16.1 Power on

1. **MASTER BAT** - ON
2. **AVIONICS** - ON
3. Power/Com Volume/ Squelch Knob - rotate clockwise past the detent

4.16.2 Com Spacing

Com spacing may be selected between 8.33 kHz and 25 kHz to allow for regional requirements.

NOTE

When switching from 8.33 kHz to 25 kHz mode, any 8.33 kHz-specific user frequencies will be deleted from the user frequency list. This only affects the user frequencies within the 8.33 kHz spectrum.

1. **FUNC** - press
2. Large knob - turn to select the SYS Function
3. Small knob - turn to view the Com spacing function
4. ENT key - press
5. Small knob - turn to set the Com spacing
6. ENT key - press

4.16.3 Selecting a Com Frequency

1. C/N key - press to reach the Com radio function, if necessary
2. Large knob - turn to change the values in one MHz increments
3. Small knob - turn to change the values in 25 kHz or 8.33 kHz increments
4. Large/Small knobs - turn clockwise to increase / counterclockwise to decrease the frequency values.
5. Flip/Flop key - press and release to toggle the Standby frequency to the Active frequency

4.16.4 Monitoring the Standby Com Channel

1. MON key - press to listen to the standby frequency; small “MN” will replace the “STB” to the left of the Standby frequency

4.16.5 Saving a Com Channel

1. ENT key - press - the Standby frequency is selected and the Waypoint name field will be active
2. Small knob - turn to select characters
3. Large knob - turn to move the cursor
4. ENT key - press after selecting the desired characters
5. Large knob - turn to select the waypoint Type
6. Small knob - turn to select the Type from the list
7. ENT key - press after making a selection

4.16.6 Com Database Look-Up

1. CURSOR knob - press from the Com display to activate the database look-up function
2. Small knob - to select characters and turn the Large knob to move the cursor
3. ENT key - press after selecting the desired characters. Turn the Small knob to scroll through the list of waypoint types; waypoint Types with a “+” sign will have more frequencies for the same type. After selection, the selected waypoint and type will be remembered for 30 minutes.
4. ENT key - to copy the frequency into the Standby frequency location; press and release the Flip/Flop key to swap the Active and Standby frequencies

4.16.7 Selecting a Nav Frequency

1. C/N key - press to reach the Nav radio function; the NAV annunciator on the top line of the display will show
2. Large knob - turn to change the values in one MHz increments
3. Small knob - turn to change the values in 50 kHz increments
4. Flip/Flop key - press and release to toggle the Standby frequency to the Active frequency

CAUTION

The Identifier is determined from the database and is not the decoded Nav Identifier.

NOTE

Both Nav and Com frequencies cannot be displayed at the same time.

4.16.8 Saving a Nav Channel

1. ENT key - press - the Waypoint name field will be active
2. Small knob - turn to select characters
3. Large knob - turn to move the cursor
4. ENT key - press after selecting the desired characters
5. Large knob - turn to select the waypoint Type
6. Small knob - turn to select characters
7. Large knob - turn to move the cursor
8. ENT key - press after selecting the desired characters

4.16.9 OBS Mode

1. OBS key - press; if annunciator above the key lights:
2. Large and Small knobs - adjust the Omni Bearing Selector

4.16.10 VOR Operation

Channel the GNC 255A NAV / COMM to the desired VOR frequency and positively identify the station by listening to received audio. Determine the NAV warning flag is out of view.

Flying inbound to a VOR station is accomplished by first rotating the OBS knob to center the deviation indicator, and determining the TO-FROM meter is in the TO condition. The airplane is then turned to a magnetic heading which is the same as the selected course with proper allowance for wind correction. When the aircraft is on course, the vertical pointer will be centered. If the aircraft moves off course, the deviation indicator will move away from the center position and flying in the direction of pointer deflection (left or right) is required to reintercept the course.

The procedure for flying outbound from a VOR station is the same as flying inbound, except the OBS knob is first rotated to cause a “FROM” indication to appear with the pointer centered.

To intercept a selected VOR radial (from the station) and fly outbound, turn the OBS control to set the desired radial under the top indicator index. Maneuver the airplane to fly the selected radial magnetic heading plus 45° intercept angle which will provide a sufficient intercept angle. The intercept angle should be reduced as the deviation needle approaches an on course condition (center) to prevent excessive course bracketing.

4.16.11 Localizer Operation

Select the desired localizer frequency and observe that the localizer warning flag is concealed. The TO-FROM flag is not functional for localizer operation. When flying on the front course or outbound on the back course make corrections toward the localizer (vertical) needle deflection. The localizer path narrows as the approach end of the runway becomes closer. When flying inbound on the back-course or outbound on the front course, the corrections are made away from the direction of needle deflection. A helpful hint when flying the localizer is to set the localizer heading on the OBS dial under the lubber line for quick reference.

4.16.12 Glideslope Operation

The glideslope (horizontal) needle provides the pilot with vertical steering information during ILS approaches. The glideslope circuitry is energized when the associated localizer frequency is selected on the navigation receiver. Observe that the glideslope warning flag is concealed. The glideslope needle deflects towards the direction the pilot must fly to remain on the glide path.

If the glideslope needle deflects upward the airplane is below the glide path and the pilot must climb to again intercept the glide path and center the needle. If the needle deflects downward the airplane is above the glide path and the pilot must descend to again intercept the glide path and center the needle. When the needle is centered the airplane is on the glide path.

4.16.13 Power off

1. Power / Volume knob - rotate counter clockwise past the detent
2. **AVIONICS** - OFF
3. **MASTER BAT** - OFF

Chapter 5 - PERFORMANCE

No change.

Chapter 6 - WEIGHT AND BALANCE

Upon removal or installation of the Garmin GNC 255A NAV / COMM and CDI MD200-306 the change of empty weight and corresponding center of gravity of the airplane must be recorded according to Chapter 6 of the POH.

Chapter 7 - DESCRIPTION OF AIRPLANE AND SYSTEMS

7.13 Instruments and Avionics

Garmin GNC 255A NAV / COMM (Fig. 9-1) consists of a transmitter / receiver for VHF communication (COM) and a receiver for navigation information (NAV). These are combined with operating controls in one unit. The COM section of the GNC 255A NAV / COMM operates in the aviation voice band, from 118.000 to 136.975 MHz, in 25 kHz steps (default). For European operations, a Com radio configuration of 8.33 kHz steps from 118.000 to 136.992 MHz is also available. The NAV section operates from 108 MHz to 117.95 MHz decoding both the VHF Omni Range and Localizer navigation signals. The built-in Glideslope receiver will automatically tune the corresponding glideslope paired frequencies (328 MHz to 335 MHz) when the localizer is tuned.

Refer to the Garmin GNC 255A/255B Pilot's Guide, P/N 190-01182-01 (revision A or later) for complete descriptions of the Garmin GNC 255A NAV/COM.

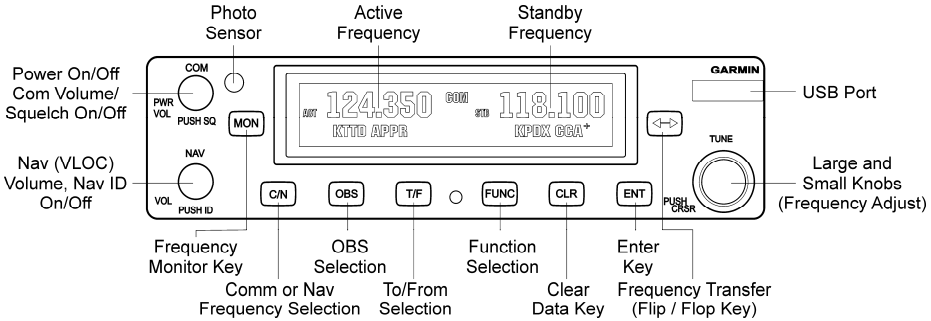

Fig. 9-1: Garmin GNC 255A NAV/COMM

Refer to the Installation Manual and Operating Instructions MD-200-302/303/306/307 Series Course Deviation Indicator, Manual Number 8017972 (revision 3 or later) for complete descriptions of the CDI.

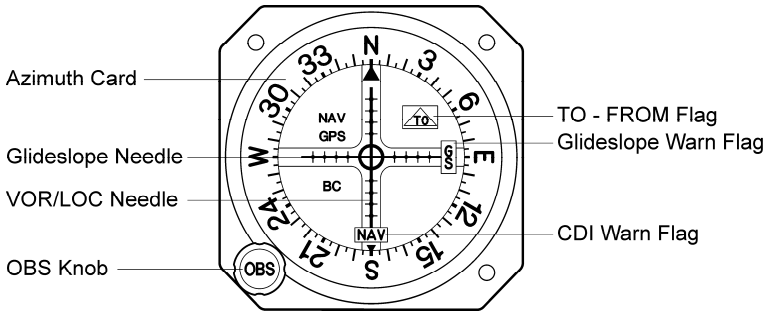

Fig. 9-2: CDI MD200-306

7.13.1 GNC 255A Controls

Power/Com Volume/Squelch Knob

The Power/Com Volume/Squelch knob located in the top left corner of the bezel controls audio volume for the Com radio. Rotating the knob clockwise past the detent turns power on and counter-clockwise turns power off. When the Com radio is active, press the Power/Com Volume/Squelch knob to toggle automatic squelch control On/Off for the Com radio.

The Com radio features an automatic squelch to reject many localized noise sources. You may override the squelch function by pressing the Power/Com Volume/Squelch knob. This facilitates listening to a distant station or setting the desired volume level.

To override the automatic squelch, press the Power/Com Volume/Squelch knob momentarily. Press the Power/Com Volume/Squelch knob again to return to automatic squelch operation. A “SQ” indication appears to the left of the active Com frequency window in the upper left corner of the display when automatic squelch is overridden.

Nav Volume/ID Knob

The Nav Volume/ID knob located in the bottom left corner of the bezel controls audio volume for the Nav radio. Press the Nav Volume/ID knob and the Morse code tones will be heard. When Morse code tone is active, “ID” will appear to the left of the Nav active frequency.

Large/Small Concentric Knobs

The Large right and Small right knobs are used for tuning frequencies and data entry.

Flip/Flop Key

Press and release the Flip/Flop key to switch between the active (left-most) and standby (right-most) frequency. Switching between Com frequencies is disabled while you are transmitting.

C/N (Com/Nav) Key

Press the C/N key to select the Com or Nav (VLOC) radio mode.

OBS Key

Press the OBS key to see the current OBS setting and graphic CDI. The OBS page will be disabled if the unit is installed with an external converter.

FUNC (Function) Key

The FUNC (Function) key accesses function categories for the following: the Com Radio, Nav Radio, ICS Configuration, System Configuration, and Timer. Pressing the FUNC key once displays the Function mode. Pressing the FUNC key a second time exits the Function mode.

T/F (To/From) Key

Press the T/F key to toggle between the bearing TO or radial FROM the active VOR. The T/F page also shows Distance/Speed/ Time information. The T/F key does not operate for Localizer frequencies.

CLR Key

Pressing the CLR key erases information, cancels entries, and resets timers.

ENT Key

Press the ENT key to save selected values, to confirm a prompt, or to save the Standby frequency.

MON (Monitor) Key

The MON (Monitor) key will engage the monitor function where the Standby frequency may be monitored while still listening to the Active frequency.

USB Port

The USB port is used to update the frequency database in the GNC 255.

7.13.2 CDI Controls

OBS

Used to select appropriate inbound or outbound bearing to a VOR station or waypoint.

Chapter 8 - HANDLING AND SERVICING

8.10 GNC 255A / COMM troubleshooting

Problem	Possible Cause	Action
GNC 255A does not power on	No power to the GNC 255A	Check power connections, breakers, and main avionic switch
	Faulty electrical wiring or connection	Contact your dealer to perform electrical system test
No Nav audio	Output disabled or set to a low level	Contact dealer
No audio in Com	Mixed with Com feature	Contact dealer
GNC 255A does not transmit	No power to Com	Check power connections
	Mic key connection	Check Mic key input connection
Intercom doesn't function	It can be enabled or disabled via a remote mounted switch or via the menu.	Check connections
	No voice activation, or must talk too loud	Check ICS page, Intercom ON/OFF, Adjust Intercom
Can't change active frequency	Com Radio not communicating. The radio may also be in lockout mode. In this case the radio would be tuned to 121.50 and the active freq would not be able to be changed.	If in Lock Out mode, press the external Com FLIP/FLOP key for two seconds to return to normal operation or cycle the avionics power. If the condition persists, contact dealer.
OBS readout display "---"	Resolver failure	Contact dealer
	Calibration error	Recalibrate resolver
Display shows "Incorrect Calibration Checksum" at start-up	Corrupted system calibration parameters	Contact factory

NOTE

Refer to the Garmin GTR 225/GNC 255 TSO Installation Manual, P/N 190-01182-02 (revision A or later) for complete maintenance procedures.

Intentionally left blank

Supplement No. 16

Installation of ELT KANNAD 406 AF-COMPACT

Aircraft Registration Number: **OM - CAD**

Aircraft Serial Number: **C0605**

This Supplement must be attached to the POH when the ELT KANNAD 406 AF-COMPACT is installed in accordance with the manufacturer's approved documentation.

Information in this Supplement completes or replaces information in the basic POH for the below mentioned parts only. Limitations, procedures and information not mentioned in this Supplement and included in the basic POH stay valid.

This Supplement completes information necessary for the airplane operation with equipment installed on the airplane. This Supplement is a permanent part of this POH and must remain in this POH at all times when the ELT KANNAD 406 AF-COMPACT is installed.

This supplement is EASA approved under EASA Minor Change Approval No. 10062712
Approval Date: 24 July 2017

This document is prepared in accordance with the AP DOA Approval No. AP332.

RECORD OF REVISIONS

Rev. No.	Affected pages	Revision name	Approved	Date

Chapter 1 - GENERAL INFORMATION

The airplane is equipped with ELT (Emergency Locator Transmitter) KANNAD 406 AF-COMPACT device. This ELT is two-frequency (121.5 / 406.028 MHz) radio transmitter generating a signal to assist in SAR (Search And Rescue) for missing aircraft and is certified as Automatic Fixed (AF) ELT with the approved outside antenna.
The 406 MHz frequency is used by COSPAS-SARSAT satellites for precise pinpointing and identification of the aircraft in distress and facilitate SAR operation.
The 121.5 MHz frequency is used by SAR services for homing in the final stage of rescue operations.

ELT KANNAD 406 AF-COMPACT has ETSO Authorization No. EASA.21O.818, Rev.B, dated 19/07/2013.

Chapter 2 - LIMITATIONS

2.14 Other limitations

- The ELT KANNAD 406 AF-COMPACT Installation and Operation manual, DOC08038F (Revision 05 or later) and Remote Control Panel RC200 Installation and User manual DMA00514E (Revision 04 or later) must be available onboard.

2.15 Limitation placards and markings

Operating limitation on instrument panel

The placard below is not used for the installed ELT KANNAD 406 AF-COMPACT:

FOR AVIATION EMERGENCY USE ONLY. UNAUTHORIZED OPERATION PROHIBITED.

The same text is on the ELT remote control panel RC200.

2.16 Limitation placards and markings

Placard is placed on the outer surface of the fuselage near the ELT:



The placard below is not used for the installed ELT KANNAD 406 AF-COMPACT:

ELT CONTROL

The “ELT” marking is on the ELT remote control panel RC200.

Chapter 3 - EMERGENCY PROCEDURES

3.31 ELT using before forced landing

In case of emergency situation before performing a forced landing, especially in remote, extensively wooded and mountainous areas, and if possible, the ELT transmitter should be activated manually by switching the remote switch (on RC200 panel) to the ON-position. The red LED should start flashing.

Immediately after a forced landing where emergency assistance is required, the ELT should be utilized as follows (the following points must then be executed directly on the ELT unit):

1. ELT Remote Switch .....Verify ON
   - Switch the ELT Remote Switch to the ON-position even if the red LED is flashing.
   - If the airplane radio is operable and can be safety used (no threat of fire or explosion), turn radio ON and select 121.5 MHz.
     If the ELT can be heard transmitting, it is working properly.
2. Battery Power .....Conserve
   - Do not use radio transceiver until the rescue aircraft is in sight.

After sighting the rescue aircraft:

3. ELT Remote Switch ..... "ARM" position to prevent radio interference.

   • Attempt contact with rescue aircraft with the radio transceiver set to a frequency of 121.5 MHz. If no contact is established, switch the remote switch to the ON-position immediately.

NOTE

*If it was not possible to turn the ELT before performing an emergency landing and nor it was activated automatically during hard landing, and if possible, turn it to the ON-position manually by the remote switch (on RC2*00 panel) or by the main switch on the main ELT unit.

Chapter 4 - NORMAL PROCEDURES

4.1 Preflight check

Inspection Check List

①	• **ELT**	- check the antenna and the RC200 remote control panel connection, - check the main 3-position switch setting to the ARM position - check the 3-position switch on the RC200 remote control panel setting to the ARMED (middle) position

NOTE

Refer to the ELT KANNAD 406 AF-COMPACT Installation and Operation manual, DOC08038F (Revision 05 or later) and Remote Control Panel RC200 Installation and User manual DMA00514E (Revision 04 or later) for complete operating procedures.

Chapter 5 - PERFORMANCE

No change.

Chapter 6 - WEIGHT AND BALANCE

No change.

Chapter 7 - DESCRIPTION OF AIRPLANE AND SYSTEMS

7.13 Instruments and Avionics

7.13.3 ELT KANNAD 406 AF-COMPACT

General

The ELT (Emergency Locator Transmitter) KANNAD 406 AF-COMPACT serves as a rescue device, enabling identification of the aircraft in distress and facilitating SAR (Search And Rescue) operation.

The KANNAD 406 AF-COMPACT is designed to be installed onboard aircraft to transmit a distress signal on frequencies:

- 406 MHz (COSPAS-SARSAT satellites) frequency for precise pinpointing and identification of the aircraft in distress.
- 121.5 MHz used for homing in the final stages of the rescue operations.

The KANNAD 406 AF-COMPACT is certified as Automatic Fixed (AF) ELT with the approved outside antenna.

The ELT KANNAD 406 AF-COMPACT is composed of a transmitter, a mounting bracket, the remote control panel RC200 and an outside antenna.

The transmitter and the bracket are mounted in the upper rear part of the baggage compartment in the cockpit.

The outside antenna is mounted on the upper fuselage part near the tail.

The remote control panel is installed on the right part of the instrument panel and connected to the ELT with wiring.

The housing of KANNAD 406 AF-COMPACT transmitter is made of moulded plastic with excellent mechanical resistance.

Controls and connectors

On the main unit front panel of the ELT KANNAD 406 AF-COMPACT are this controls and connectors:

1. A 3-position switch ARM/OFF/ON
2. A red LED visual indicator
3. DIN 12 socket for connection to an optional Remote Control Panel, a programming dongle or a programming equipment
4. BNC connector for the antenna

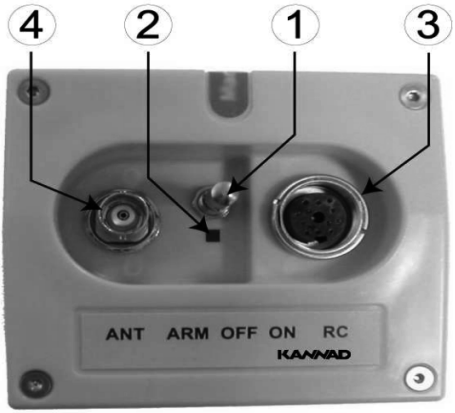

Front panel of ELT KANNAD 406 AF-COMPACT

On the remote control panel RC200 are this elements:

1. A 3-position switch ON/ARMED/RESET & TEST
2. A red LED visual indicator

Power supply

The ELT is supplied with electrical power independent from the on board electrical system of the aircraft.

The energy is provided by a battery pack composed of a LiMnO2 two-element battery.

With new batteries, the battery pack allows operation more than 48 hours.

The transmitter battery expiry date is 6 years after manufacturing. The battery pack must be replaced every 6 years, if no activation of the ELT has occurred during the lifetime of the battery, or if one of the following apply:

- after more than 1 hour of real transmission (cumulated duration)
- before or on the battery expiration date
- after use in an emergency
- after an unintentional activation of unknown duration

OPERATING MODES OF KANNAD 406 AF/AF-COMPACT ELT

The following table provides an overview of the different operating modes of the ELT:

KANNAD 406 AF/AF-COMPACT ELT		
Mode	**Switch on ELT Unit/Remote Control Panel (RCP)**	**Function**
ARMED/ STANDBY	ARM (normal flight setting)	Stand-by mode for automatic activation of the ELT by the crash sensor (g-sensor). This mode is mandatory during flight. The switch on the ELT unit must be in the ARM position to allow operation of the ELT via the remote control panel.
ON	ON	Overrides the crash sensor and activates ELT transmission manually (refer to the Installation Manual of the ELT for testing).
OFF	OFF (ELT unit only)	Turns the ELT off for maintenance or to terminate the emergency signal transmission after rescue or inadvertent operation.
RESET TEST	RESET TEST (remote control panel only)	To initiate the self-test function of the ELT and to terminate transmission of an activated ELT on the remote control panel.

In order to be automatically activated by the crash sensor, the ELT must be in standby (**ARM**) mode. This mode is mandatory during flight. The ELT can only be operated with the remote control panel if it is in the stand-by mode (**ARM**). It is recommended to only switch the ELT OFF during maintenance or when the aircraft is parked for a longer period of time. Ensure that the ELT antenna is clear of obstructions.

After a forced landing, it is recommended to tune in 121.5 MHz on the COM transceiver to check if the ELT has been activated. Once the ELT is activated, it can be manually deactivated by setting the ELT main switch to the OFF position or by pressing the remote switch to the RESET TEST position on the ELT remote control panel RC200 for at least 1 second, and then returning the switch to the ARMED position. In the case of unintentional activation, national regulations with regard to informing Air Traffic Control must be observed.

Chapter 8 - HANDLING AND SERVICING

8.11 ELT KANNAD 406 AF-COMPACT service and maintenance

The ELT batteries must be replaced upon reaching the date stamped on the batteries, after an inadvertent activation of unknown duration, or whenever the batteries have been in use for one cumulative hour.

The ELT batteries have a limited service life and must be replaced every 6 years if no ELT activation has occurs before.

SELF-TEST PROCEDURE

CAUTION

Do not perform a self-test without the antenna connected because the transmitter could be damaged!

SELF-TEST KANNAD 406 AF-COMPACT		
1	Set ELT switch to the OFF position	The ELT is installed on the right side of the baggage compartment floor behind the copilot's seat. The ELT switches to the OFF mode.
2	Set ELT switch to the ARM position	A buzzer sounds during the whole self-test procedure. After a few seconds, the test result is displayed with the LED as follows: • One long flash indicates that the system is operational and that no errors were found. • A series of short flashes indicates that the test has failed and error conditions were found.
3	Return the ELT switch to the OFF position or retain the ARM position	Setting the ELT switch back to the OFF position turns the ELT off. Before the next flight, the ELT must be switched to the ARMED mode (Stand-by mode).

CAUTION

Provided that the ELT switch is in the ARM position, the self-test may also be initiated through the remote control panel by pushing the switch to the RESET TEST position. The self-test sequence is the same as described above for the ELT unit.

The number of flashes gives an indication to the fault detected during the self-test.

Number of flashes	Failure mode
3+1	LOW BATTERY VOLTAGE
3+2	LOW RF POWER
3+3	FAULTY VCO LOCKING
3+4	NO IDENTIFICATION PROGRAMMED

If the self-test fails, contact the manufacturer/distributor as soon as possible.

NOTE

Refer to the ELT KANNAD 406 AF-COMPACT Installation and Operation manual, DOC08038F (Revision 05 or later) and Remote Control Panel RC200 Installation and User manual DMA00514E (Revision 04 or later). for complete maintenance.